FLUKE®

8808A
Digital Multimeter

Users Manual

July 2007

© 2007 Fluke Corporation, All rights reserved.
All product names are trademarks of their respective companies.

LIMITED WARRANTY AND LIMITATION OF LIABILITY

Each Fluke product is warranted to be free from defects in material and workmanship under normal use and service. The warranty period is one year and begins on the date of shipment. Parts, product repairs, and services are warranted for 90 days. This warranty extends only to the original buyer or end-user customer of a Fluke authorized reseller, and does not apply to fuses, disposable batteries, or to any product which, in Fluke's opinion, has been misused, altered, neglected, contaminated, or damaged by accident or abnormal conditions of operation or handling. Fluke warrants that software will operate substantially in accordance with its functional specifications for 90 days and that it has been properly recorded on non-defective media. Fluke does not warrant that software will be error free or operate without interruption.

Fluke authorized resellers shall extend this warranty on new and unused products to end-user customers only but have no authority to extend a greater or different warranty on behalf of Fluke. Warranty support is available only if product is purchased through a Fluke authorized sales outlet or Buyer has paid the applicable international price. Fluke reserves the right to invoice Buyer for importation costs of repair/replacement parts when product purchased in one country is submitted for repair in another country.

Fluke's warranty obligation is limited, at Fluke's option, to refund of the purchase price, free of charge repair, or replacement of a defective product which is returned to a Fluke authorized service center within the warranty period.

To obtain warranty service, contact your nearest Fluke authorized service center to obtain return authorization information, then send the product to that service center, with a description of the difficulty, postage and insurance prepaid (FOB Destination). Fluke assumes no risk for damage in transit. Following warranty repair, the product will be returned to Buyer, transportation prepaid (FOB Destination). If Fluke determines that failure was caused by neglect, misuse, contamination, alteration, accident, or abnormal condition of operation or handling, including overvoltage failures caused by use outside the product's specified rating, or normal wear and tear of mechanical components, Fluke will provide an estimate of repair costs and obtain authorization before commencing the work. Following repair, the product will be returned to the Buyer transportation prepaid and the Buyer will be billed for the repair and return transportation charges (FOB Shipping Point).

THIS WARRANTY IS BUYER'S SOLE AND EXCLUSIVE REMEDY AND IS IN LIEU OF ALL OTHER WARRANTIES, EXPRESS OR IMPLIED, INCLUDING BUT NOT LIMITED TO ANY IMPLIED WARRANTY OF MERCHANTABILITY OR FITNESS FOR A PARTICULAR PURPOSE. FLUKE SHALL NOT BE LIABLE FOR ANY SPECIAL, INDIRECT, INCIDENTAL, OR CONSEQUENTIAL DAMAGES OR LOSSES, INCLUDING LOSS OF DATA, ARISING FROM ANY CAUSE OR THEORY.

Since some countries or states do not allow limitation of the term of an implied warranty, or exclusion or limitation of incidental or consequential damages, the limitations and exclusions of this warranty may not apply to every buyer. If any provision of this Warranty is held invalid or unenforceable by a court or other decision-maker of competent jurisdiction, such holding will not affect the validity or enforceability of any other provision.

Fluke Corporation	Fluke Europe B.V.
P.O. Box 9090	P.O. Box 1186
Everett, WA 98206-9090	5602 BD Eindhoven
U.S.A.	The Netherlands

11/99

To register your product online, visit register.fluke.com

Table of Contents

Chapter	Title	Page
1	**Introduction and Specifications**	**1-1**
	Introduction	1-3
	Manual Set	1-3
	About this Manual	1-4
	Safety Information	1-4
	General Safety Summary	1-4
	Symbols	1-6
	Options and Accessories	1-7
	General Specifications	1-8
	Voltage	1-8
	Dimensions	1-8
	Display	1-8
	Environment	1-8
	Safety	1-8
	EMC	1-8
	Triggering	1-8
	Math Functions	1-8
	Electrical	1-9
	Remote Interfaces	1-9
	Warranty	1-9
	Electrical Specifications	1-9
	DC Voltage Specifications	1-9
	AC Voltage Specifications	1-10
	Resistance	1-11
	DC Current	1-11
	AC Current	1-12
	Frequency	1-13
	Continuity	1-13
	Diode Test	1-13
2	**Preparing the Meter for Operation**	**2-1**
	Introduction	2-3
	Unpacking and Inspecting the Meter	2-3
	Contacting Fluke	2-3

Storing and Shipping the Meter 2-3
Power Considerations 2-3
Selecting the Line Voltage 2-4
Replacing the Fuses 2-4
Line-Power Fuse 2-4
Current-Input Fuses 2-5
Connecting to Line Power 2-7
Turning Power On 2-8
Adjusting the Bail 2-8
Installing the Meter into an Equipment Rack 2-8
Cleaning the Meter 2-9
Fluke 45 Emulation 2-9
Illuminating All Display Segments 2-10

3 Operating the Meter from the Front Panel 3-1

Introduction 3-3
Dual Display 3-6
Primary Display 3-6
Secondary Display 3-6
Rear Panel 3-8
Adjusting Meter Range 3-8
Selecting a Measurement Rate 3-9
Selecting a Measurement Function 3-9
Measuring Voltage 3-10
Measuring Frequency 3-10
Frequency Ranging 3-11
Measuring Resistance 3-11
2-Wire Resistance Measurement 3-11
4-Wire Resistance Measurement 3-12
Measuring Current 3-13
Automatic Input Terminal Detection 3-14
Diode / Continuity Testing 3-15
Making a Triggered Measurement 3-16
Setting the Trigger Mode 3-16
Connecting to an External Trigger 3-16
Selecting a Function Modifier 3-17
Relative Readings Modifier (REL) 3-18
Decibels and Auto Power Modifier 3-18
Touch Hold Function (HOLD) 3-19
Minimum / Maximum Modifier (MIN MAX) 3-20
Using the Function Modifiers in Combination 3-21
Second Level Operations (Using the SHIFT Button) 3-21
Compare Function (COMP) 3-22
Setting the Compare Range 3-22
Using the Compare Function 3-22
List and Number Editors 3-22
Using the List Editor 3-23
Using the Number Editor 3-24
Function Keys S1 – S6 3-24
Power-Up Configuration 3-25
Factory Settings of Power-Up Configuration 3-25
Calibration 3-26

4 Operating the Meter Using the Computer Interface 4-1

Introduction 4-3
Local and Remote Operations 4-3
Computer Interfaces 4-3
Preparing the Meter for Operations via the RS-232 Interface 4-3
Setting Communication Parameters (RS-232) 4-3
RS-232 Print-Only Mode 4-4
Cabling the Meter to a Host or Printer (RS-232) 4-5
Character Echoing and Deletion 4-6
Device Clear Using ^C (CNTRL C) 4-6
RS-232 Prompts 4-6
Getting Started with an Installation Test 4-6
Installation Test for RS-232 Operation 4-6
If Test Fails 4-7
How the Meter Processes Input 4-7
Input Strings 4-7
Input Terminators 4-7
Sending Numeric Values to the Meter 4-8
Sending Command Strings to the Meter 4-8
How the Meter Processes Output 4-8
Triggering Output 4-9
External Triggering from the Front Panel 4-9
Setting the Trigger Type Configuration 4-10
External Trigger via the Computer Interface 4-10
Status Registers 4-11
Event Status and Event Status Enable Registers 4-12
Status Byte Register 4-14
Reading the Status Byte Register 4-15
Computer Interface Command Set 4-15
Common Commands 4-16
Function Commands and Queries 4-17
Function Modifier Commands and Queries 4-19
Range and Measurement Rate Commands and Queries 4-21
Measurement Queries 4-23
Compare Commands and Queries 4-24
Trigger Configuration Commands 4-24
Miscellaneous Commands and Queries 4-25
RS-232 Remote / Local Configurations 4-25
RS-232 Save / Recall System Configurations 4-26
Sample Program Using the RS-232 Computer Interface 4-27

Appendices

A Applications A-1
B 2X4 Test Leads B-1

List of Tables

Table	Title	Page
1-1.	Safety Information	1-5
1-2.	Safety and Electrical Symbols	1-6
1-3.	Accessories	1-7
2-1.	Line Voltage to Fuse Rating	2-4
2-2.	Line-Power Cord Types Available from Fluke	2-7
3-1.	Front-Panel Features	3-4
3-2.	Display Annunciators and Indicators	3-7
3-3.	Rear-Panel Features	3-8
3-4.	RS-232 Pin Out	3-17
3-5.	RS232 Pin Out	3-19
3-6.	Second Level Operations	3-21
3-7.	List Editor Options	3-23
3-8.	Number Editor Options	3-24
3-9.	Factory Power-Up Configuration	3-25
4-1.	RS-232 Communication Parameters Factory Settings	4-4
4-2.	Print Rates in RS-232 Print-Only Mode	4-5
4-3.	Trigger Types	4-9
4-4.	RS-232 Reading Transfer Rates	4-10
4-5.	Status Register Summary	4-11
4-6.	Description of Bits in ESR and ESE	4-14
4-7.	Description of Bits in the Status Byte Register (STB)	4-14
4-8.	Common Commands	4-16
4-9.	Function Commands and Queries	4-17
4-10.	Function Modifier Commands and Queries	4-19
4-11.	Range and Measurement Rate Commands and Queries	4-21
4-12.	Measurement Queries	4-23
4-13.	Compare Commands and Queries	4-24
4-14.	Trigger Configuration Commands	4-24
4-15.	Miscellaneous Commands and Queries	4-25
4-16.	Measurement Units Output with Format 2	4-25
4-17.	Remote/Local Configuration Commands	4-26
4-18.	Save / Call System Configuration Commands	4-26
A-1.	Allowable Combinations of Measurements	A-2
A-2.	Sample Dual Display Applications	A-3
A-3.	Typical Measurement Intervals (in seconds) for Dual Display Measurements	A-6

A-4. Typical Settling Delays (in Seconds) A-6
A-5. Typical Measurement Intervals (in seconds) for Dual Display Measurements A-7

List of Figures

2-1. Replacing the Line Power Fuse 2-5
2-2. Replacing the Current-Input Fuses 2-6
2-3. Line-Power Cord Types Available from Fluke 2-7
2-4. Bail Adjustment and Removal 2-8
2-5. Boot removal 2-9
3-1. Front Panel 3-4
3-2. Display Annunciators and Indicators 3-6
3-3. Rear Panel 3-8
3-4. Voltage and Frequency Measurement 3-10
3-5. 2-Wire Resistance Measurement 3-11
3-6. 4-Wire Resistance Measurement 3-12
3-7. Input Connections for 4-wire ohms using 2x4 wire leads 3-13
3-8. Current Measurement <200 mA 3-14
3-9. Current Measurement 200 mA to 10 A 3-14
3-10. Continuity Test 3-15
3-11. Diode Test 3-16
3-12. External Trigger Circuit 3-17
4-1. External Trigger Using Pin 9 of RS-232 Interface 4-10
4-2. Overview of Status Data Structures 4-12
4-3. Event Status and Event Status Enable Registers 4-13
4-4. Sample Program for RS-232 Computer Interface 4-28
A-1. Example of Dual Display Showing Volts AC and Frequency A-2
A-2. DC Voltage and DC Current Measurement on Input Signal A-4
A-3. Shunt Method of Low-Level Current Measurement A-8
A-4. Zero Burden Voltage Low-Level Current Measurement A-8
B-1. 2X4 Wire Test Leads B-2

Chapter 1
Introduction and Specifications

Title	Page
Introduction	1-3
Manual Set	1-3
About this Manual	1-4
Safety Information	1-4
General Safety Summary	1-4
Symbols	1-6
Options and Accessories	1-7
General Specifications	1-8
Voltage	1-8
Dimensions	1-8
Display	1-8
Environment	1-8
Safety	1-8
EMC	1-8
Triggering	1-8
Math Functions	1-8
Electrical	1-9
Remote Interfaces	1-9
Warranty	1-9
Electrical Specifications	1-9
DC Voltage Specifications	1-9
AC Voltage Specifications	1-10
Resistance	1-11
DC Current	1-11
AC Current	1-12
Frequency	1-13
Continuity	1-13
Diode Test	1-13

Introduction

The Fluke 8808A Digital Multimeter (hereafter referred to as the Meter) is a 5-1/2 digit dual-display multimeter designed for bench-top, field service, and system applications. The multiple measurement functions, plus the RS-232 remote interface, make the Meter an ideal candidate for precision manual measurements and use in automated systems. For portability, the Meter includes a carrying handle that also serves as a bail for bench-top operation.

Some features provided by the Meter are:

- A dual vacuum fluorescent display that allows two properties of an input signal to be displayed at the same time (e.g., ac voltage in one display and frequency in the other)
- 5-1/2 digit resolution
- True-rms ac
- 2, 4 wire resistance or patented 2x4 wire resistance measurement technique
- 200 mV to 1000 Vdc range with 1 µV sensitivity
- 200 mV to 750 Vac rms with 1 µV sensitivity
- 200 Ω to 100 MΩ with 1 mΩ sensitivity
- 200 µA to 10 Adc with 1 nA sensitivity
- 20 mA to 10 Aac with 100 nA sensitivity
- Frequency measurements from 20 Hz to 1 MHz
- Continuity and diode test
- Measurement rates of 2.5, 20 and 100 samples/second (slow, medium and fast, respectively)
- Front-panel setup key for single key access to saved setups
- A compare mode to determine if a measurement is within defined limits
- Remote operation via the RS-232 interface
- Closed-case calibration (no internal calibration adjustments)

Manual Set

The manual set for this Meter consists of a printed *Getting Started Manual* and a *Users Manual* on a CD-ROM. The *Getting Started Manual* contains basic getting started information, contacting Fluke, unpacking, and general specifications.

About this Manual

This manual contains all the information a new user will need to operate the Meter effectively. This manual is divided into the following chapters:

Chapter 1, “Introduction and Specifications,” provides information on how safely to use the Meter, and standard and optional accessories and specifications.

Chapter 2, “Preparing the Meter for Operation,” provides information on setting the Meter’s line voltage, connecting it to a power source, and turning the Meter on.

Chapter 3, “Operating the Meter from the Front Panel,” provides detailed information on using the Meter from the front panel.

Chapter 4, “Applications,” provides detailed information on using the Meter to make electrical measurements.

Chapter 5, “Operating the Meter using the Computer Interface,” describes how to set up, configure, and operate the Meter via the RS-232 computer interface on the Meter’s rear panel.

Appendices

Safety Information

This section addresses safety considerations and describes symbols that may appear on the Meter or in the manual.

A **Warning** statement identifies conditions or practices that could result in injury or death. A **Caution** statement identifies conditions or practices that could result in damage to the Meter or equipment to which it is connected.

⚠⚠Warning

To avoid electric shock, personal injury, or death, carefully read the information in Table 1-1, “Safety Information,” before attempting to install, use or service the Meter.

General Safety Summary

This instrument has been designed and tested in accordance with the European standard publication EN61010-1: 2001 and U.S. / Canadian standard publications UL 61010-1:2004and CAN/CSA-C22.2 No.61010.1:2004. The Meter has been supplied in a safe condition.

This manual contains information and warnings that must be observed to keep the instrument in a safe condition and ensure safe operation.

To use the Meter correctly and safely, read and follow the precautions in Table 1-1 and follow all the safety instructions or warnings given throughout this manual that relate to specific measurement functions. In addition, follow all generally accepted safety practices and procedures required when working with and around electricity.

Table 1-1. Safety Information

⚠⚠ Warning

To avoid possible electric shock, personal injury, or death, read the following before using the Meter:

- **Use the Meter only as specified in this manual, or the protection provided by the Meter might be impaired.**
- **Do not use the Meter in wet environments.**
- **Inspect the Meter before using it. Do not use the Meter if it appears damaged.**
- **Inspect the test leads before use. Do not use them if insulation is damaged or metal is exposed. Check the test leads for continuity. Replace damaged test leads before using the Meter.**
- **Verify the Meter's operation by measuring a known voltage before and after using it. Do not use the Meter if it operates abnormally. Protection may be impaired. If in doubt, have the Meter serviced.**
- **Whenever it is likely that safety protection has been impaired, make the Meter inoperative and secure it against any unintended operation.**
- **Have the Meter serviced only by qualified service personnel.**
- **Do not apply more than the rated voltage, as marked on the Meter, between the terminals or between any terminal and earth ground.**
- **Always use the power cord and connector appropriate for the voltage and outlet of the country or location in which you are working.**
- **Remove test leads from the Meter before opening the case.**
- **Never remove the cover or open the case of the Meter without first removing it from the main power source.**
- **Never operate the Meter with the cover removed or the case open.**
- **Use caution when working with voltages above 30 V ac rms, 42 V ac peak, or 42 V dc. These voltages pose a shock hazard.**
- **Use only the replacement fuses specified by the manual.**
- **Use the proper terminals, function and range for your measurements.**
- **Do not operate the Meter around explosive gas, vapor or dust.**
- **When using probes, keep your fingers behind the finger guards.**
- **When making electrical connections, connect the common test lead before connecting the live test lead. When disconnecting, disconnect the live test lead before disconnecting the common test lead.**
- **Disconnect circuit power and discharge all high voltage capacitors before testing resistance, continuity, diodes, or capacitance.**
- **Before measuring current, check the Meter's fuses and turn OFF power to the circuit before connecting the Meter to the circuit.**
- **When servicing the Meter, use only specified replacement parts.**

Symbols

Table 1-2 lists safety and electrical symbols that appear on the Meter or in this manual.

Table 1-2. Safety and Electrical Symbols

Symbol	Description	Symbol	Description
⚠	Risk of danger. Important information. See manual.	⏻	Standby power ON / OFF
⚠	Hazardous voltage. Voltage > 30 V dc or ac peak might be present.	⏚	Earth ground
~	AC (Alternating Current)	⊣⊢	Capacitance
⎓	DC (Direct Current)	⊳	Diode
≂ or ≅	AC or DC (Alternating or Direct Current)	▭	Fuse
)))	Continuity test or continuity beeper tone	⎍	Digital signal
ϟ	Potentially hazardous voltage	🔧	Maintenance or Service
⧈	Double insulated	♻	Recycle
ESD	Static awareness. Static discharge can damage parts.	🗑	Do not dispose of this product as unsorted municipal waste. Contact Fluke or a qualified recycler for disposal.
CAT II	Measurement Category II is for measurements performed on circuits directly connected to the low voltage installation.	CAT I	Measurement Category I is for measurements not directly connected to mains.

Options and Accessories

Table 1-3 lists available options and accessories.

Table 1-3. Accessories

Item	Model / Part Number
Premium Test Lead Set	TL71
Fuse, .25*1.25, 0.063 A, 250 V, Slow	163030
Fuse, .25*1.25, 0.125 A, 250 V, Slow	166488
F1 - Fuse, 11 A, 1000 V, Fast, 406INX1.5IN, BULK	803293
F2 - Fuse, 440 mA, 1000 V, Fast, 406INX1.375IN, BULK	943121
Rack Mount Kit 8845A & 8846A Single	Y8846S
Rack Mount Kit 8845A & 8846A Dual	Y8846D
RS-232 Cable (2 m)	RS43
Precision Electronic Prob Set	TL910
2X4 Wire Ohms 1000 V Test Lead	TL2X4W-PTII
FlukeView Forms Basic Software	FVF-SC5
FlukeView Forms Software Upgrade to enhanced version	FVF-UG

General Specifications

Voltage

100V Setting ..... 90 V to 110 V
120V Setting ..... 108 V to 132 V
220V Setting ..... 198 V to 242 V
240V Setting ..... 216 V to 264 V
Frequency ..... 47 Hz to 440 Hz
Power Consumption ..... 15 VA peak (10 W average)

Dimensions

Height ..... 88 mm (3.46 in)
Width ..... 217 mm (8.56 in)
Depth ..... 297 mm (11.7 in)
Weight ..... 2.1 kg (4.6 lb)

Display

Vacuum Fluorescent Display, segment

Environment

Temperature

Operating ..... 0 °C to 50 °C

Storage ..... -40 °C to 70 °C

Warm Up ..... ½ hour to full uncertainty specifications

Relative Humidity (non-condensing)

Operating ..... Uncontrolled (< 10°C)
<90 % (10 °C to 30 °C)
<75 % (30 °C to 40 °C)
<45 % (40 °C to 50 °C)

Storage ..... -40 °C to 70 °C <95 %

Altitude

Operating ..... 2,000 Meters

Storage ..... 12,000 Meters

Vibration ..... Complies with MIL-PRF-28800F Class 3

Safety

Complies with IEC 61010-1:2001, ANSI/ISA 61010-1 (S82.02.01):2004, UL 61010-1:2004, CAN/CSA C22.2 No. 61010.1:2004, CAT I 1000V/CAT II 600 V

EMC

Designed to comply with IEC 61326-1:1997+A1:1998+A2:2000

Triggering

Trigger Delay ..... 400 ms
External Trigger Delay ..... <2 ms
External Trigger Jitter ..... <1 ms
Trigger Input ..... TTL Levels
Trigger Output ..... 5 V max

Math Functions

Min/max, relative, hold, compare and dB functions

Electrical

Input Protection ..... 1000 V all ranges

Overrange ..... 10 % on the largest ranges of all functions except continuity and diode test

Remote Interfaces

RS-232C

Warranty

One year

Electrical Specifications

Accuracy specifications are valid for 5-½ digit mode and after at least a half-hour warm-up

DC Voltage Specifications

Maximum Input ..... 1000 V on any range

Common Mode Rejection ..... 120 dB at 50 or 60 Hz ±0.1% (1 kΩ unbalance)

Normal Mode Rejection ..... 80 dB at Slow Rate

A/D Nonlinearity ..... 15 ppm of range

Input Bias Current ..... <30 pA at 25 °C

Settling Considerations ..... Measurement settling times are affected by source impedance, cable dielectric characteristics, and input signal changes

Input Characteristics

Range	Full-Scale (5-1/2 Digits)	Resolution			Input Impedance
		Slow	Medium	Fast	
200 mV	199.999 mV	1 µV	10 µV	10 µV	>10 GΩ[1]
2 V	1.99999 V	10 µV	100 µV	100 µV	>10 GΩ[1]
20 V	19.9999 V	100 µV	1000 µV	1000 µV	10 MΩ±1 %
200 V	199.999 V	1 mV	10 mV	10 mV	10 MΩ±1 %
1000 V	1000.00 V	10 mV	100 mV	100 mV	10 MΩ±1 %

Notes:

[1] At some dual display measurements, the input impedance of 200 mV and 2 V ranges may be changed to 10 MΩ.

Accuracy

Range	Accuracy [1]		Temperature Coefficient/°C Outside 18 – 28 °C
	90 days	1 year	
	23 °C ± 5 °C	23 °C ± 5°C	
200 mV	0.01 + 0.003	0.015 + 0.004	0.0015 + 0.0005
2 V	0.01 + 0.002	0.015 + 0.003	0.001 + 0.0005
20 V	0.01 + 0.003	0.015 + 0.004	0.0020 + 0.0005
200 V	0.01 + 0.002	0.015 + 0.003	0.0015 + 0.0005
1000 V	0.01 + 0.002	0.015 + 0.003	0.0015 + 0.0005

Notes:

[1] Accuracy given as ± (% of reading + % of range)

AC Voltage Specifications

AC Voltage specifications are for ac sinewave signals >5 % of range. For inputs from 1 % to 5 % of range and <50 kHz, add an additional error of 0.1 % of range, and for 50kHz to 100 kHz, add 0.13 % of range.

Maximum Input ..... 750 V rms or 1000 V peak or 8 x 10^7 Volts-Hertz product

Measurement Method ..... AC-coupled true-rms. Measures the ac component of input with up to 1000 V dc bias on any range.

AC Filter Bandwidth:

Slow ..... 20 Hz – 100 kHz

Common Mode Rejection ..... 60 dB at 50 Hz or 60 Hz (1 kΩ unbalance)

Maximum Crest Factor ..... 3:1 at Full Scale

Additional Crest Factor Errors (<100 Hz) ..... Crest Factor 1-2, 0.05 % of full scale
Crest Factor 2-3, 0.2 % of full scale

Input Characteristics

Range	Full-Scale (5-1/2 Digits)	Resolution			Input Impedance
		Slow	Medium	Fast	
200 mV	199.999 mV	1 uV	10 uV	10 uV	1 MΩ ±2 % shunted by <100 pf
2 V	1.99999 V	10 uV	100 uV	100 uV	
20 V	19.9999 V	100 uV	1000 uV	1000 uV	
200 V	199.999 V	1 mV	10 mV	10 mV	
750 V	750.00 V	10 mV	100 mV	100 mV	

Accuracy

Range	Frequency	Accuracy [1]		Temperature Coefficient/°C Outside 18 – 28 °C
		90 days	1 year	
		23 °C ± 5 °C	23 °C ± 5 °C	
200 mV	20 Hz – 45Hz	0.8 + 0.05	0.9 + 0.05	0.01 + 0.005
	45 Hz – 20 kHz	0.15 + 0.05	0.2 + 0.05	0.01 + 0.005
	20 kHz – 50 kHz	0.3 + 0.05	0.35 + 0.05	0.01 + 0.005
	50 kHz – 100 kHz	0.8 + 0.05	0.9 + 0.05	0.05 + 0.01
2 V	20 Hz – 45Hz	0.8 + 0.05	0.9 + 0.05	0.01 + 0.005
	45 Hz – 20 kHz	0.15 + 0.05	0.2 + 0.05	0.01 + 0.005
	20 kHz – 50 kHz	0.3 + 0.05	0.35 + 0.05	0.01 + 0.005
	50 kHz – 100 kHz	0.8 + 0.05	0.9 + 0.05	0.05 + 0.01
20 V	20 Hz – 45 Hz	0.8 + 0.05	0.9 + 0.05	0.01 + 0.005
	45 Hz – 20 kHz	0.15 + 0.05	0.2 + 0.05	0.01 + 0.005
	20 kHz – 50 kHz	0.3 + 0.05	0.35 + 0.05	0.01 + 0.005
	50 kHz – 100 kHz	0.8 + 0.05	0.9 + 0.05	0.05 + 0.01
200 V	20 Hz – 45Hz	0.8 + 0.05	0.9 + 0.05	0.01 + 0.005
	45 Hz – 20 kHz	0.15 + 0.05	0.2 + 0.05	0.01 + 0.005
	20 kHz – 50 kHz	0.3 + 0.05	0.35 + 0.05	0.01 + 0.005
	50 kHz – 100 kHz	0.8 + 0.05	0.9 + 0.05	0.05 + 0.01
750 V	20 Hz – 45Hz	0.8 + 0.05	0.9 + 0.05	0.01 + 0.005
	45 Hz – 20 kHz	0.15 + 0.05	0.2 + 0.05	0.01 + 0.005
	20 kHz – 50 kHz	0.3 + 0.05	0.35 + 0.05	0.01 + 0.005
	50 kHz – 100 kHz	0.8 + 0.05	0.9 + 0.05	0.05 + 0.01

Notes:

[1] Accuracy given as ± (% of reading + % of range)

Resistance

Specifications are for 4-wire resistance function, or 2-wire resistance with REL. If REL is not used, add 0.2 Ω for 2-wire resistance plus lead resistance.

Measurement Method ..... Current source referenced to LO input

Max Lead Resistance (4-wire ohms) ..... 10 % of range per lead for 200 Ω, 2 kΩ ranges. 1 kΩ per lead on all other ranges.

Input Protection ..... 1000 V on all ranges

Input Characteristics

Range	Full-Scale (5-1/2 Digits)	Resolution			Current Source
		Slow	Medium	Fast	
200 Ω	199.999 Ω	0.001 Ω	0.01 Ω	0.01 Ω	0.8 mA
2 kΩ	1.99999 kΩ	0.01 Ω	0.1 Ω	0.1 Ω	0.8 mA
20 kΩ	19.9999 kΩ	0.1 Ω	1 Ω	1 Ω	0.08 mA
200 kΩ	199.999 kΩ	1 Ω	10 Ω	10 Ω	0.008 mA
2 MΩ	1.99999 MΩ	10 Ω	100 Ω	100 Ω	0.9 µA
20 MΩ	19.9999 MΩ	100 Ω	1 kΩ	1 kΩ	0.16 µA
100 MΩ	100.000 MΩ	1 kΩ	10 kΩ	10 kΩ	0.16 µA || 10 MΩ

Accuracy

Range	Accuracy [1]		Temperature Coefficient/°C Outside 18 – 28 °C
	90 days	1 year	
	23 °C ± 5 °C	23 °C ± 5 °C	
200 Ω	0.02 + 0.004	0.03 + 0.004	0.003 + 0.0006
2 kΩ	0.015 + 0.002	0.02 + 0.003	0.003 + 0.0005
20 kΩ	0.015 + 0.002	0.02 + 0.003	0.003 + 0.0005
200 kΩ	0.015 + 0.002	0.02 + 0.003	0.003 + 0.0005
2 MΩ	0.03 + 0.003	0.04 + 0.004	0.004 + 0.0005
20 MΩ	0.2 + 0.003	0.25 + 0.003	0.01 + 0.0005
100 MΩ	1.5 + 0.004	1.75 + 0.004	0.2 + 0.0005

Notes:

[1] Accuracy given as ± (% of reading + % of range)

DC Current

Input Protection ..... Tool accessible 11 A / 1000 V and 440 mA / 1000 V fuses.

Shunt Resistance ..... 0.01 Ω for 2 A and 10 A ranges
1 Ω for 20 mA and 200 mA
Burden voltage < 1 mV for 200 uA and 2 mA range.

Input Characteristics

Range	Full-Scale (5-1/2 Digits)	Resolution			Burden Voltage
		Slow	Medium	Fast	
200 uA	199.999 µA	0.001 µA	0.01 µA	0.01 µA	<1 mV
2 mA	1999.99 µA	0.01 µA	0.1 µA	0.1 µA	<1 mV
20 mA	19.9999 mA	0.1 µA	1 µA	1 µA	<0.05 V
200 mA	199.999 mA	1 µA	10 µA	10 µA	<0.5 V
2 A	1.99999 A	10 µA	100 µA	100 µA	<0.1 V
10 A	10.0000 A	100 µA	1 mA	1 mA	<0.5 V

Accuracy

Range	Accuracy [1]		Temperature Coefficient/°C Outside 18 – 28 °C
	90 days	1 year	
	23 °C ± 5 °C	23 °C ± 5 °C	
200 µA	0.02 + 0.005	0.03 + 0.005	0.003 + 0.001
2 mA	0.015 + 0.005	0.02 + 0.005	0.002 + 0.001
20 mA	0.03 + 0.02	0.04 + 0.02	0.005 + 0.001
200 mA	0.02 + 0.005	0.03 + 0.008	0.005 + 0.001
2 A	0.05 + 0.02	0.08 + 0.02	0.008 + 0.001
10 A	0.18 + 0.01	0.2 + 0.01	0.008 + 0.001

Notes:

[1] Accuracy given as ± (% of reading + % of range)

AC Current

The following ac current specifications are for sinusoidal signals with amplitudes greater than 5 % of range. For inputs from 1 % to 5 % of range, add an additional error of 0.1 % of range.

Input Protection ..... Tool accessible 11 A / 1000 V and 440 mA / 1000 V fuses

Measurement Method ..... AC-coupled True RMS

Shunt Resistance ..... 0.01 Ω for 2 A and 10 A ranges
1 Ω for 20 mA and 200 mA

AC Filter Bandwidth:

Slow ..... 20 Hz – 100 kHz

Maximum Crest Factor ..... 3:1 at Full Scale

Additional Crest Factor Errors (<100 Hz) ..... Crest Factor 1-2, 0.05 % of full scale
Crest Factor 2-3, 0.2 % of full scale

Input Characteristics

Range	Full-Scale (5-1/2 Digits)	Resolution			Burden Voltage
		Slow	Medium	Fast	
20 mA	19.9999 mA	0.1 µA	1 µA	1 µA	<0.05 V
200 mA	199.999 mA	1 µA	10 µA	10 µA	<0.5 V
2 A	1.99999 A	10 µA	100 µA	100 µA	<0.1 V
10 A	10.0000 A	100 µA	1 mA	1 mA	<0.5 V

Accuracy

Range	Frequency	Accuracy [1]		Temperature Coefficient/°C Outside 18 – 28 °C
		90 days	1 year	
		23 °C ± 5 °C	23 °C ± 5 °C	
20 mA	20 Hz - 45Hz	1 + 0.05	1.25 + 0.06	0.015 + 0.005
	45 Hz - 2 kHz	0.25 + 0.05	0.3 + 0.06	0.015 + 0.005
200 mA	20 Hz - 45Hz	0.8 + 0.05	1 + 0. 06	0.015 + 0.005
	45 Hz - 2 kHz	0.25 + 0.05	0.3 + 0.06	0.015 + 0.005
2 A	20 Hz - 45Hz	1 + 0.05	1.25 + 0.06	0.015 + 0.005
	45 Hz - 2 kHz	0.25 + 0.05	0.3 + 0.06	0.015 + 0.005
10 A	20 Hz - 45Hz	1 + 0.1	1.25 + 0.12	0.015 + 0.005
	45 Hz - 2 kHz	0.35 + 0.1	0.5 + 0.12	0.015 + 0.005

Notes:

[1] Accuracy given as ± (% of reading + % of range)

Frequency

Gate Time ..... 131 ms

Measurement Method ..... AC-coupled input using the ac voltage measurement function.

Settling Considerations ..... When measuring frequency after a dc offset voltage change, errors may occur. For the most accurate measurement, wait up to 1 second to allow input blocking RC time constant to settle.

Measurement Considerations ..... To minimize measurement errors, shield inputs from external noise when measuring low voltage, low frequency signals.

Accuracy

Range	Frequency	Accuracy		Temperature Coefficient/°C Outside 18 – 28 °C
		90 days	1 year	
		23 °C ± 5 °C	23 °C ± 5 °C	
100 mV to 750 V[1,2]	20 Hz – 2 kHz	0.01 + 0.002	0.01 + 0.003	0.002 + 0.001
	2 kHz – 20 kHz	0.01 + 0.002	0.01 + 0.003	0.002 + 0.001
	20 kHz – 200 kHz	0.01 + 0.002	0.01 + 0.003	0.002 + 0.001
	200 kHz – 1 MHz	0.01 + 0.004	0.01 + 0.006	0.002 + 0.002

Notes:

[1] Input > 100 mV

[2] Limited to 8* 10^7 V Hz

Continuity

Continuity Threshold..... 20 Ω

Test Currents ..... 1 mA

Response Time ..... 100 samples/sec with audible tone

Rate..... Fast

Maxiumum Reading.....199.99 Ω

Resolution..... .....0.01 Ω

Diode Test

Response Time ..... 100 samples/sec with audible tone

Rate.....Fast

Maxiumum Reading.....1.9999 V

Resolution..... .....0.1 mV

Chapter 2
Preparing the Meter for Operation

Title **Page**

Introduction 2-3
Unpacking and Inspecting the Meter 2-3
Contacting Fluke 2-3
Storing and Shipping the Meter 2-3
Power Considerations 2-3
  Selecting the Line Voltage 2-4
  Replacing the Fuses 2-4
    Line-Power Fuse 2-4
    Current-Input Fuses 2-5
Connecting to Line Power 2-7
Turning Power On 2-8
Adjusting the Bail 2-8
Installing the Meter into an Equipment Rack 2-8
Cleaning the Meter 2-9
Fluke 45 Emulation 2-9
Illuminating All Display Segments 2-10

Introduction

This chapter explains how to prepare the Meter for operation by selecting the proper line voltage, connecting the proper power cord for the selected line voltage, and turning the Meter on. Also included is information on the proper storage, shipping, and cleaning of the Meter.

Unpacking and Inspecting the Meter

Every care is taken in the choice of packing material to ensure that your Meter will reach you in perfect condition. If the Meter has been subject to excessive handling in transit, there may be visible external damage to the shipping carton. In the event of damage, keep the shipping container and packing material for the carrier's inspection.

Carefully unpack the Meter from its shipping container and inspect the contents for damaged or missing items. If the Meter appears damaged or something is missing, contact the carrier and Fluke immediately. Save the container and packing material in case you have to return the Meter.

Contacting Fluke

To order accessories, receive operating assistance, or get the location of the nearest Fluke distributor or Service Center, call:

USA:	1-888-99-FLUKE (1-888-993-5853)
Canada:	1-800-36-FLUKE (1-800-363-5853)
Europe:	+31 402-675-200
Japan:	+81-3-3434-0181
Singapore:	+65-738-5655
Anywhere in the world:	+1-425-446-5500

Or visit Fluke's Web site at *www.fluke.com*.

To register this product, visit *register.fluke.com*.

Storing and Shipping the Meter

To prepare the Meter for storage or shipping, place it inside a sealed bag, fit the bag into the packing material inside the original shipping container, and then secure the package. Use the original shipping container if possible, as it provides shock isolation for normal handling operations. If the original shipping container is not available, use a box that is 17.5 x 15.5 x 8.0 inches, with cushioning material that fills the space between the Meter and the sides of the box.

To store the Meter, place the box under cover in a location that complies with the storage environment specifications described in the "General Specifications" section in Chapter 1.

Power Considerations

The Meter operates on varying power distribution standards found throughout the world and must be set up to operate on the line voltage that will power it. The Meter is packed ready for use with a line voltage determined at the time of ordering. If the selected line voltage does not match the power that the Meter will be plugged into, the Meter's line-voltage setting must be changed and replacement of the line fuse may be required.

Selecting the Line Voltage

The Meter operates on four different input line voltages. The selected line-voltage setting is visible through the window in the line-fuse holder on the Meter's rear panel.

1. Unplug the power cord.
2. Insert a small screwdriver blade into the narrow recess to the left of the fuse holder and pry it to the right until the holder pops out. See Figure 2-1.
3. Remove the voltage-selector block from the fuse holder.
4. Rotate the selector block until the desired voltage rating faces outward.
5. Replace the selector block back into the fuse holder.
6. Install the fuse holder back into the Meter and reconnect the power cord.

Changing the line-voltage setting may require a different line-power fuse for proper operation.

Replacing the Fuses

The Meter uses one fuse to protect the line-power input and two fuses to protect the current-measurement inputs.

Line-Power Fuse

The Meter has a line-power fuse in series with the power supply. Table 2-1 indicates the proper fuse for each of the four line-voltage selections. The line-power fuse is accessed through the rear panel.

1. Unplug the power cord.
2. Insert a small screwdriver blade into the narrow recess to the left of the fuse holder and pry it to the right until the holder pops out. See Figure 2-1.
3. Remove the fuse and replace it with a fuse of an appropriate rating for the selected line-power voltage. See Table 2-1.
4. Replace the selector block back into the fuse holder.

⚠⚠ Warning

To avoid electric shock or fire, do not use makeshift fuses or short-circuit the fuse holder.

Table 2-1. Line Voltage to Fuse Rating

Line Voltage Selection	Fuse Rating
100 / 120	0.125 A, 250 V (slow blow)
220 / 240	0.063 A, 250 V (slow blow)

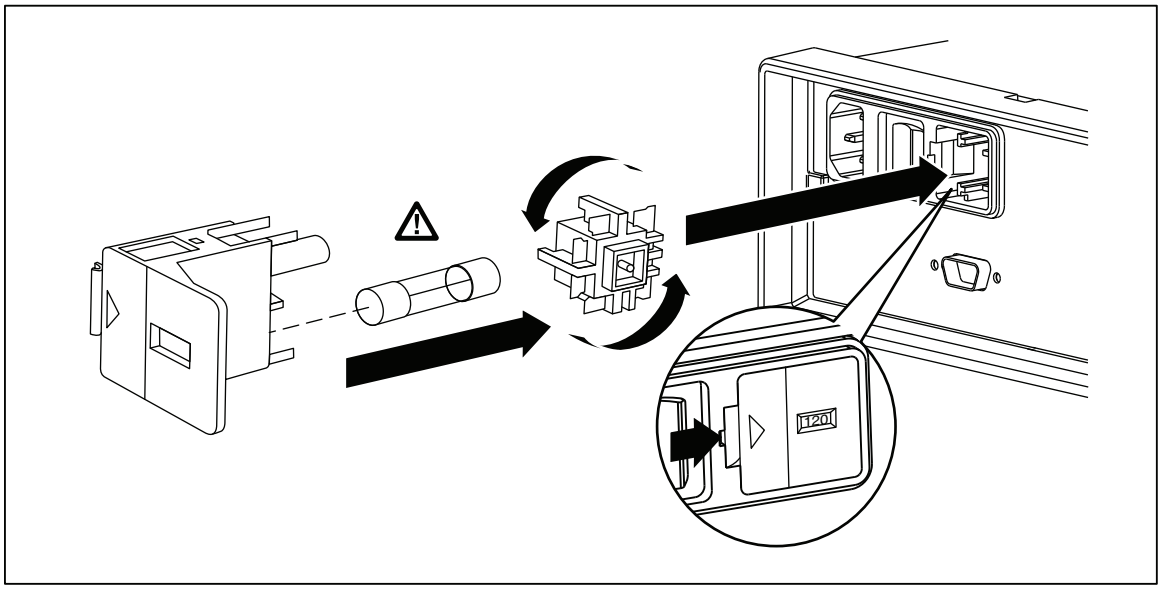

eue20.eps

Figure 2-1. Replacing the Line Power Fuse

Current-Input Fuses

The **200 mA** and **10 A** inputs are protected by user-replaceable fuses.

- The **200 mA** input is protected by a fuse (F2) rated at 440 mA, 1000 V (fast blow), 10,000 A minimum breaking capacity.
- The **10 A** input is protected by a fuse (F1) rated at 11 A, 1000 V (fast blow), 10,000 A minimum breaking capacity.

⚠⚠ Warning

For protection against fire or arc flash, replace a blown fuse with a fuse of an identical rating.

To test the current-input fuses:

1. Turn on the Meter and plug a test lead into the **INPUT VΩ⊣+•))) HI** terminal.
2. Press Ω.
3. Press ▼ to set the range to 200 Ω. Only the 200 Ω, 2 kΩ, and 20 kΩ ranges can be used to test the mA input fuse.
4. Insert the other end of the test lead into the **mA** terminal. If the fuse is good, the Meter displays a reading of 0.000 Ω. If the fuse is blown, the Meter displays OL to indicate an overload.
5. Remove the test lead from the **mA** terminal and insert it into the **10 A** terminal. If the fuse is good, the Meter displays a reading of <1.000 Ω. If the fuse is blown, the Meter displays OL to indicate an overload.

⚠⚠ Warning

To avoid electric shock, remove the power cord and any test leads from the Meter before opening the current-input fuse cover.

To replace the current-input fuses:

1. Remove power from the Meter by unplugging its power cord.
2. Turn the Meter upside down.
3. Remove the retaining screw on the fuse access door located on the bottom of the Meter. See Figure 2-2.
4. Remove the protective cover from the fuse holders by slightly depressing the back edge of the cover to unlatch it from the printed circuit board. Pull up on the back edge of the cover and remove it from the fuse compartment.
5. Remove the defective fuse and replace it with a fuse of an appropriate rating. See Table 2-1.
6. Replace the protective cover by pushing it over the fuses while aligning the catches with the holes in the printed circuit board. Press the cover down until the catches engage the printed circuit board.
7. Replace the fuse access door and install the retaining screw.

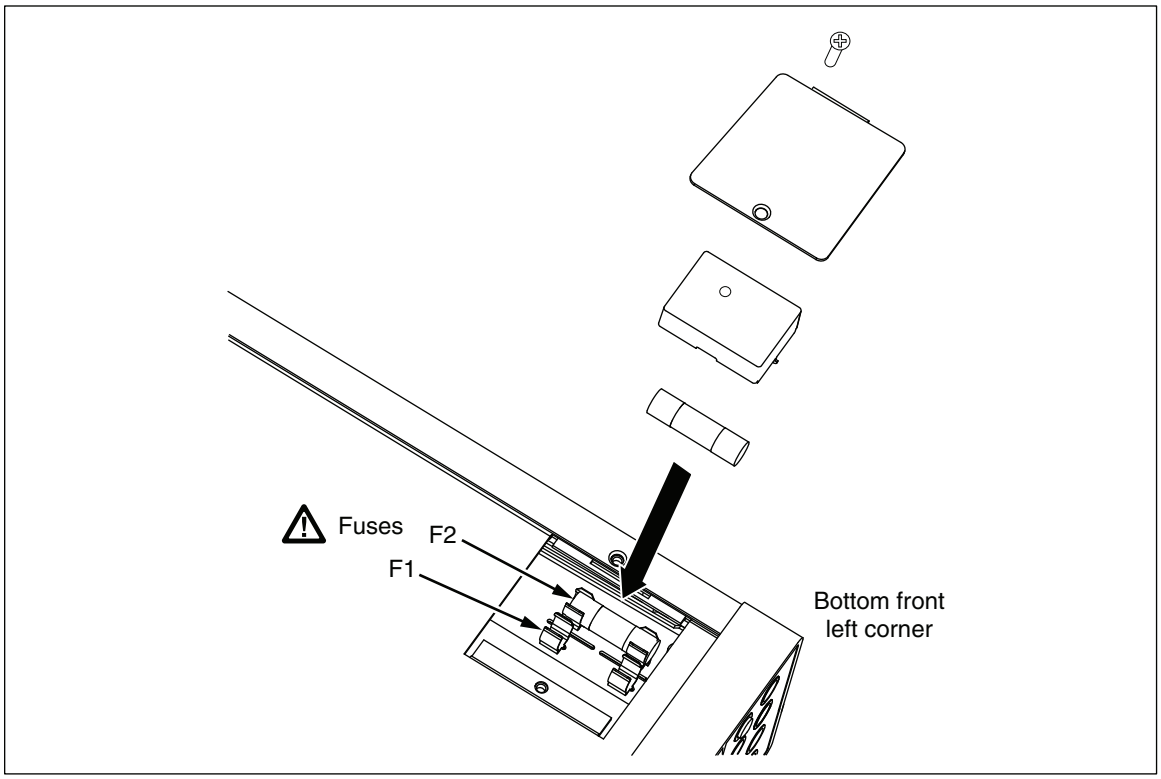

eue04.eps

Figure 2-2. Replacing the Current-Input Fuses

Connecting to Line Power

⚠⚠ Warning

To avoid shock hazard, connect the factory supplied three-conductor line power cord to a properly grounded power outlet. Do not use a two-conductor adapter or extension cord, as this will break the protective ground connection. If a two-conductor power cord must be used, a protective grounding wire must be connected between the ground terminal and earth ground before connecting the power cord or operating the Meter.

1. Verify that the line voltage is set to the correct setting.
2. Verify that the correct fuse for the line voltage is installed.
3. Connect the power cord to a properly grounded three-prong outlet. See Figure 2-3 for line-power cord types available from Fluke. Refer to Table 2-2 for descriptions of the line-power cords.

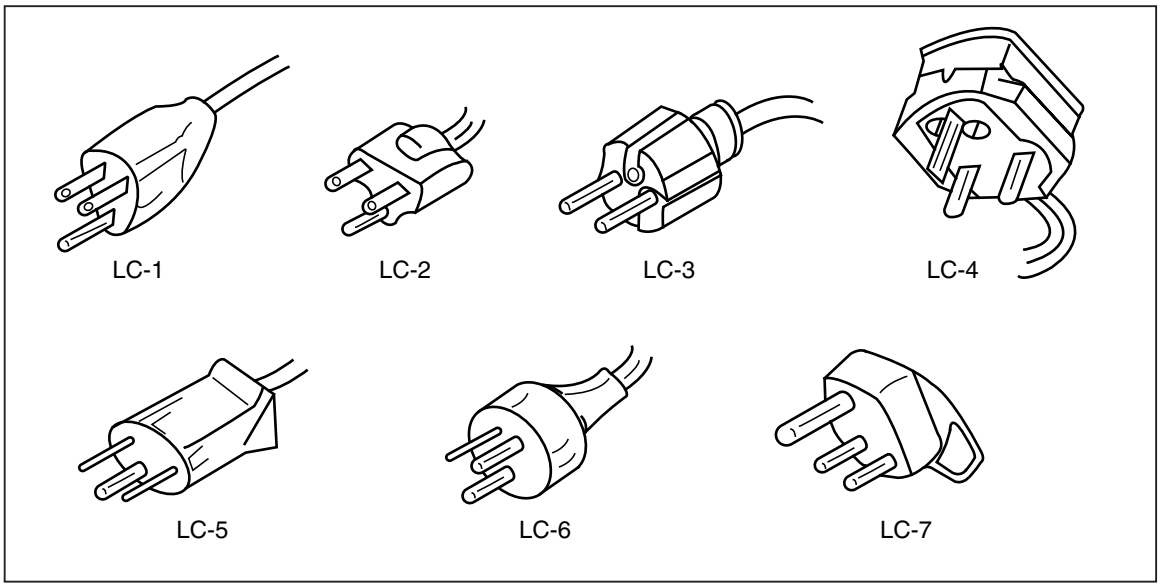

alh03.eps

Figure 2-3. Line-Power Cord Types Available from Fluke

Table 2-2. Line-Power Cord Types Available from Fluke

Type	Voltage / Current	Fluke Model Number
North America	120 V / 15 A	LC-1
North America	240 V / 15 A	LC-2
Universal Euro	220 V / 16 A	LC-3
United Kingdom	240 V / 13 A	LC-4
Switzerland	220 V / 10 A	LC-5
Australia	240 V / 10 A	LC-6
South Africa	240 V / 5 A	LC-7

Turning Power On

1. If required, connect the Meter to line power.
2. Toggle the power switch on the rear panel so the "**I**" side of the switch is depressed. The Meter will turn on and briefly illuminate all LCD segments.

Note

To save on power consumption, the Meter can be set to a standby mode by pressing ⏻ on the front panel. Press it again to bring the Meter up to full power.

Adjusting the Bail

The Meter's bail (handle) is adjustable to provide two viewing angles. The bail is also adjustable for carrying or storing the Meter.

To adjust the bail, pull the ends out to a hard stop (about 1/4-inch on each side) and then rotate it to one of the four stop positions as shown in Figure 2-4.

To remove the bail, adjust it to the vertical stop position and pull the ends all the way out.

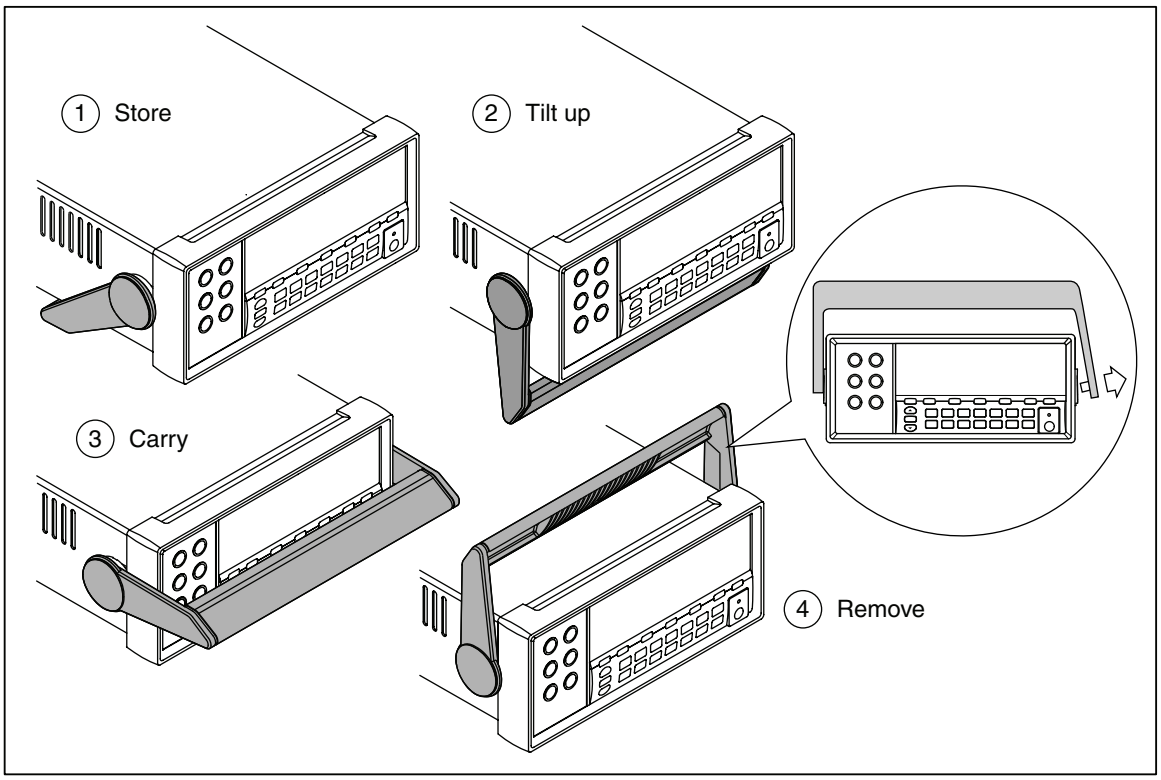

eue21.eps

Figure 2-4. Bail Adjustment and Removal

Installing the Meter into an Equipment Rack

The Meter is mountable in a standard 19-inch rack using a rack mount kit. See the "Options and Accessories" section in Chapter 1 for ordering information.

To prepare the Meter for rack mounting, remove the bail and remove the front and rear protective boots. To remove a boot, stretch a corner then slide it off as shown in Figure 2-5.

To install the Meter into the rack, refer to the instructions provided with the Rack Mount Kit.

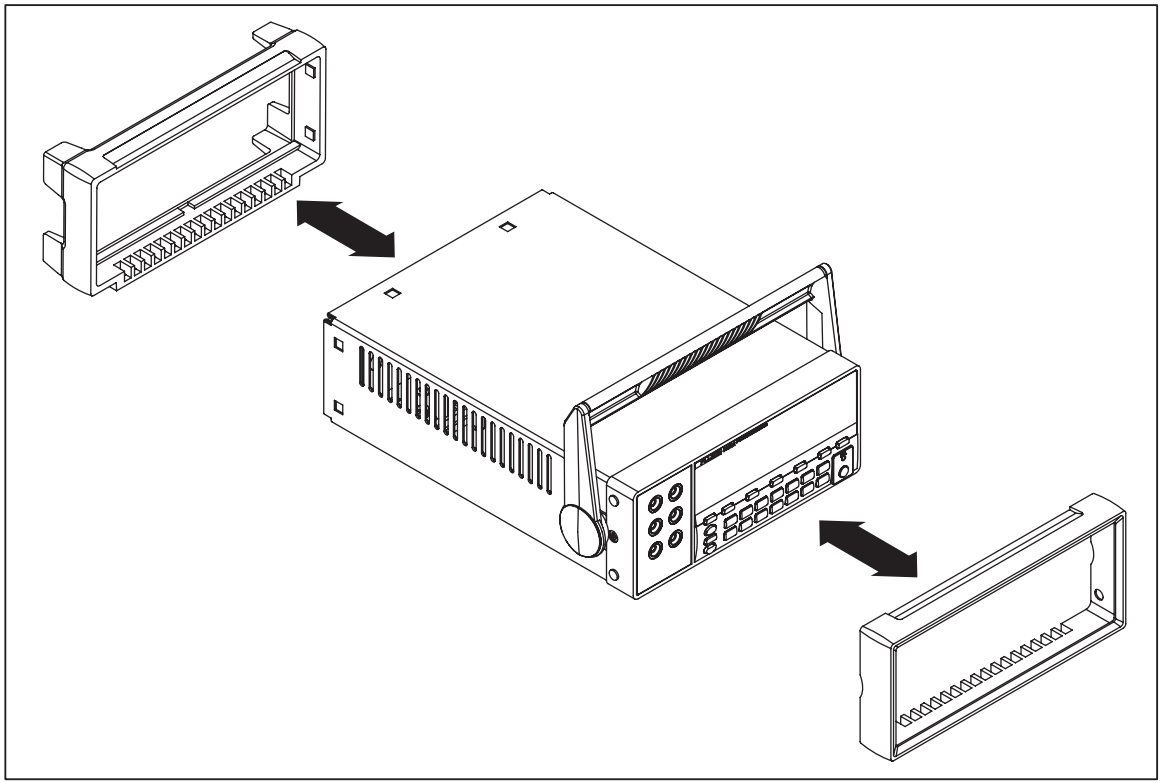

eue22.eps

Figure 2-5. Boot Removal

Cleaning the Meter

⚠⚠ Warning

To avoid electric shock or damage to the Meter, never get water inside the Meter.

⚠ Caution

To avoid damaging the Meter's housing, do not apply solvents to the Meter.

If the Meter requires cleaning, wipe it down with a cloth that is lightly dampened with water or a mild detergent. Do not use aromatic hydrocarbons, alchohol, chlorinated solvents, or methanol-based fluids when wiping down the Meter.

Fluke 45 Emulation

To switch the Meter to Fluke 45 emulation:

Press and hold Shift and S6 for two seconds.

Press ▲ or ▼ to scroll between **F8808A** and **F45**. The presently selected mode will appear bright in the display, while the other is dim.

Press RANGE to set the mode and reset the Meter.

Illuminating All Display Segments

To illimunate all display segments, start wth the Meter display off. Next, press and hold Shift then press ⏻ to turn on the Meter. Release the buttons when the display illuminates. To return to normal measurement mode, press Shift.

Chapter 3
Operating the Meter from the Front Panel

Title	Page
Introduction	3-3
Dual Display	3-6
Primary Display	3-6
Secondary Display	3-6
Rear Panel	3-8
Adjusting Meter Range	3-8
Selecting a Measurement Rate	3-9
Selecting a Measurement Function	3-9
Measuring Voltage	3-10
Measuring Frequency	3-10
Frequency Ranging	3-11
Measuring Resistance	3-11
2-Wire Resistance Measurement	3-11
4-Wire Resistance Measurement	3-12
Measuring Current	3-13
Automatic Input Terminal Detection	3-14
Diode / Continuity Testing	3-15
Making a Triggered Measurement	3-16
Setting the Trigger Mode	3-16
Connecting to an External Trigger	3-16
Selecting a Function Modifier	3-17
Relative Readings Modifier (REL)	3-18
Decibels and Auto Power Modifier	3-18
Touch Hold Function (HOLD)	3-19
Minimum / Maximum Modifier (MIN MAX)	3-20
Using the Function Modifiers in Combination	3-21
Second Level Operations (Using the SHIFT Button)	3-21
Compare Function (COMP)	3-22
Setting the Compare Range	3-22
Using the Compare Function	3-22
List and Number Editors	3-22
Using the List Editor	3-23
Using the Number Editor	3-24
Function Keys S1 – S6	3-24
Power-Up Configuration	3-25

Calibration 3-25

Introduction

The Meter can be controlled either by sending commands through its RS232 communication interface or through the front panel. This chapter explains the function and use of the controls and indicators located on the front panel of the Meter. Operating the Meter through its RS232 communication interface is covered in Chapter 4.

The front panel has three main elements: input terminals (on the left), dual display (primary and secondary displays), and keypad. See Figure 3-1 for an overview of the front panel and refer to Table 3-1 for descriptions of the front-panel features.

The front panel is used to:

- Select a measurement function (volts dc, volts ac, current dc, current ac, resistance, frequency, and diode/continuity test) for the primary and/or secondary displays
- Take a measurement and display a reading
- Select the manual or autorange mode
- Manually select a measurement range for the primary display
- Select function modifiers that cause the Meter to display relative readings, minimum or maximum values, or to select the TouchHold® function to hold a reading on the primary display
- Change the measurement rate (slow, medium, fast)
- Take a measurement and compare it against a tolerance range
- Use the editor to select from option lists, to enter a relative base, or to enter a high (HI) or low (LO) range for the compare mode
- Configure the computer interface (RS-232)
- Send measurements directly to a printer or terminal through the RS-232 interface

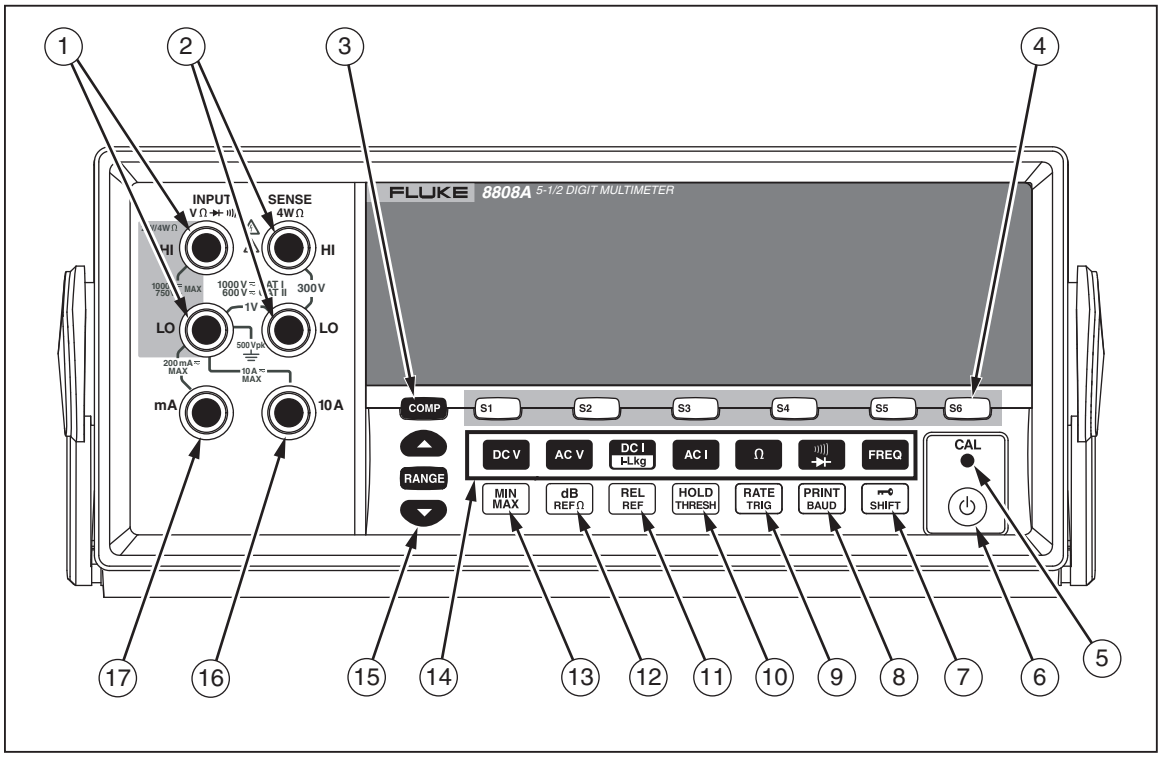

eue02.eps

Figure 3-1. Front Panel

Table 3-1. Front-Panel Features

No.	Name	Description
1	INPUT VΩ→+))) HI, LO	Input terminals for Volts, 2-Wire and 4-Wire Ohms, and Hz measurements. All measurements use the INPUT LO terminal as a common input. The LO input is isolated and may be safely floated up to 500 V peak above earth ground regardless of the measurement type. 1000 V dc is the maximum voltage rating between the INPUT HI and LO terminals.
2	SENSE 4WΩ HI, LO	4-wire Ohms measurement sense terminal
3	COMP	Compare function for determining if a reading falls within a designated range of values
4	S1 S3 S3 S4 S5 S6	For storage and retrieval of up to six test configurations
5	CAL (recessed button)	Calibrates Meter
6	⏻	Activates/deactivates standby mode for power savings
7	SHIFT	Activates second level operation for function buttons Locks the front panel operation during remote mode
8	PRINT BAUD	Primary operation: Selects Meter print mode Second level operation: Sets RS-232 communication parameters (baud rate, parity, echo)

Table 3-1. Front-Panel Features (cont.)

No.	Name	Description
⑨	RATE TRIG	Primary operation: Sets the Meter's measurement rate to slow, medium or fast Second level operation: Selects source for triggering measurement
⑩	HOLD THRESH	Primary operation: Selects Touch Hold function Second level operation: Sets Touch Hold minimum response level
⑪	REL REF	Primary operation: Selects relative readings function to display difference between relative base and input Second level operation: Sets relative base
⑫	dB REF Ω	Primary operation: Selects dB measurement mode Second level operation: sets dB reference impedance
⑬	MIN MAX	Stores the minimum and maximum inputs measured
⑭	FREQ DC V AC V DC I I-Lkg AC I Ω))))) ⊣	Selects measurement function: Frequency DC voltage AC voltage DC current AC current Resistance (ohms) Continuity / diode test (toggles)
⑮	RANGE	Toggles between manual and autorange modes ▲ and ▼ increase and decrease the range for manual ranging
⑯	10 A	Input terminal for 10 A ac and dc current measurement
⑰	mA	Input terminal for 200 mA ac and dc current measurement

Dual Display

The Meter has a 5-1/2 digit vacuum fluorescent dual display. See Figure 3-2 and Table 3-2 for an overview of the display annunciators and indicators

The dual display is comprised of a primary display and a secondary display, which show measurement readings, annunciators and messages. The annunciators indicate measurement units and the Meter's operating configuration.

The dual display allows you to see two properties for the input signal you are measuring. The Meter alternates between properties, measuring the first property and showing it on one display, and then measuring the second property and showing it on the other display. (For more detail, see the "How the Meter Takes Dual Display Measurements" section in Appendix A.)

If an input exceeds the full-scale value of the selected range, the Meter displays OL to indicate an overload.

Primary Display

The primary display comprises the lower segment of the dual display, and consists of the larger digits and annunciators. The primary display shows measurements taken using the relative readings (REL), minimum maximum (MIN MAX), Touch Hold (HOLD), and decibels (dB) function modifiers.

Secondary Display

The secondary display comprises the upper segment of the dual display, and consists of the smaller digits and annunciators.

Function modifiers REL, HOLD, MIN MAX, and dB and the manual range mode cannot be selected for the secondary display. The secondary display is either in autorange, or the same range as the primary display if both displays are in the the same function.

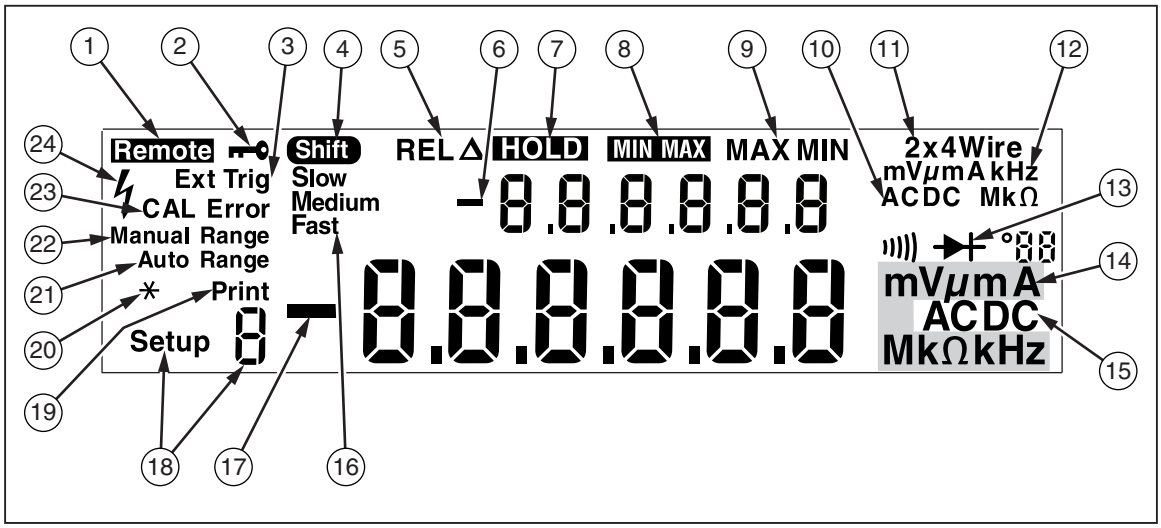

eue01f.eps

Figure 3-2. Display Annunciators and Indicators

Table 3-2. Display Annunciators and Indicators

No.	Name	Description
①	Remote	Meter is in remote mode (remotely controlled)
②	🔑	the front panel is locked out
③	Ext Trig	Meter is in external trigger mode
④	Shift	SHIFT is pressed and secondary function will be selected
⑤	REL Δ	Relative readings function modifier is selected
⑥	–	Measurement value in secondary display is negative
⑦	HOLD	Touch Hold function modifier is selected
⑧	MINMAX	Minimum maximum function modifier is selected
⑨	MAX and MIN	Reading is maximum or minimum
⑩	AC DC	Form of voltage displayed in secondary display
⑪	2x4 Wire	Resistance measurement method selected (2-wire or 4-wire)
⑫	mV µmA kHz MkΩ	Unit of measurement displayed in secondary display
⑬	))) ⊣▶⊢	Continuity test or diode test is selected
⑭	mV µmA MkΩ kHz	Unit of measurement displayed in primary display
⑮	AC DC	Form of voltage displayed in primary display
⑯	Slow, Medium, Fast	Measurement rate selected (slow, medium, fast)
⑰	–	Measurement value in primary display is negative
⑱	Setup 1 annunciator	Which configuration is currently selected
⑲	Print	Meter is in RS-232 print-only mode
⑳	* (asterisk)	Flashes for each Meter sample cycle
㉑	Auto Range	Meter is in auto range mode
㉒	Manual Range	Meter is in manual range mode
㉓	CAL Error	Calibration attempt failed
㉔	ϟ	High voltage is detected Displays when voltage is >30 V dc or ac rms

Rear Panel

See Figure 3-3 and Table 3-3 for an overview of the rear-panel features.

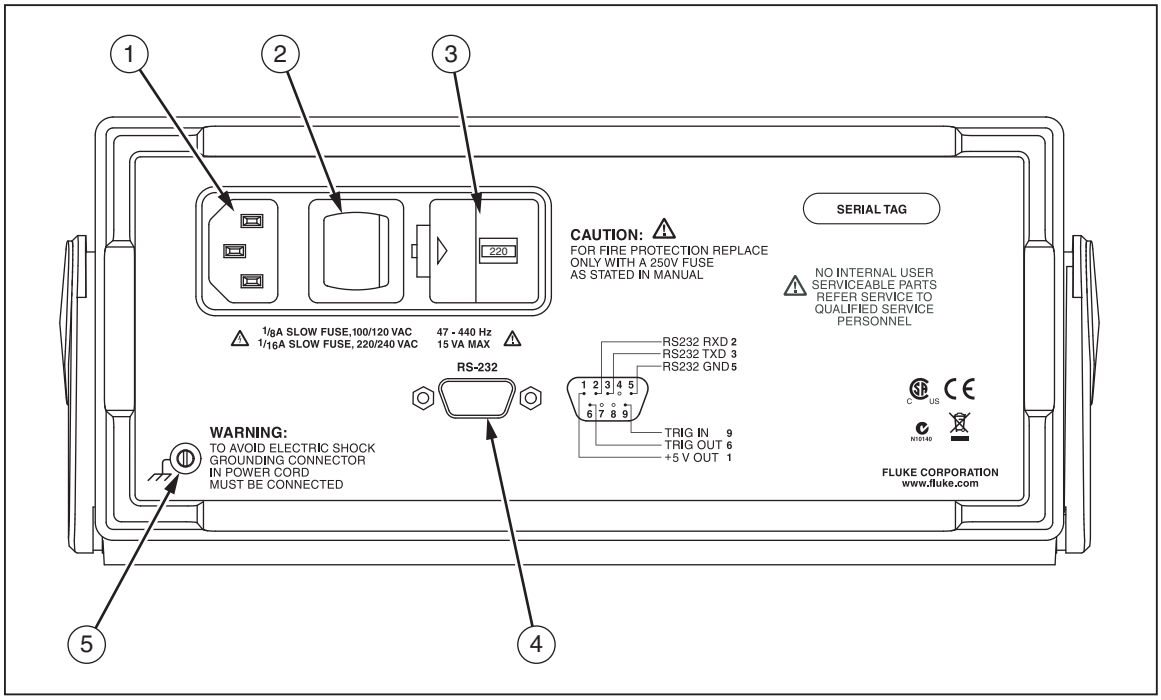

eue03.eps

Figure 3-3. Rear Panel

Table 3-3. Rear-Panel Features

No.	Name	Description
1	Line power terminal	Connects Meter to power source via power cord
2	Power switch	Turns power on and off to the Meter
3	Fuse holder and power line voltage selector	Houses fuses: 1/8 A slow fuse, 100/120 VAC 1/16 A slow fuse, 220/240 VAC Provides means to select line power voltage: 100 Vac, 120 Vac, 220 Vac, 240 Vac
4	RS-232 terminal	RS-232 and External trigger terminal. Connects Meter to a host, serial printer or terminal, and provides external tigger interface.
5	Ground terminal	Provides connection to ground

Adjusting Meter Range

Ranging operations are performed using RANGE, ▲ and ▼. Press RANGE to toggle between autorange and manual range modes. When autoranging is selected, Auto Range is displayed. When manual ranging is selected, Manual Range is displayed.

In autoranging mode, the Meter automatically selects the next higher range when a reading is greater than full-scale. If no higher range is available, OL is displayed on the primary or secondary display to indicate an overload. The Meter automatically selects a lower range when a reading is less than 95 % of full-scale of the lower range.

In autoranging mode, pressing ▲ or ▼ changes the mode to manual ranging. If ▲ is pressed, the next higher range is selected (if there is one). If ▼ is pressed, the next lower range is selected.

In manual ranging mode, the range that is set when you enter the mode becomes the selected range. The Meter remains in the selected range regardless of input. Manual ranging can only be performed on readings shown on the primary display. The secondary display is in autorange or when the primary and secondary displays are set to the same function, the secondary display uses the same range as the primary display.

Selecting a Measurement Rate

The Meter takes measurements at one of three user-selected rates: slow, medium, and fast. Rate selection allows you to maximize measurement speed, which can affect accuracy. The rate selected is shown in the primary display as Slow, Medium, or Fast.

Press [RATE TRIG] to step through the measurement rates. The rate selected applies to all basic measurements except frequency. When frequency is measured, the rate is fixed at 4 measurements per second. The measurement rate is always fast for Diode and Continuity test. Pressing [RATE TRIG] does not affect the frequency update rate.

Selecting a Measurement Function

To select a measurement function, press the applicable function button (See Table 3-1). The applicable annunciator is displayed to indicate the selected function. (For example, to measure dc voltage, press [DC V]. DC is displayed.)

To select ac + dc total rms readings, simultaneously press [AC V] and [DC V] for more than two seconds; or simultaneously press [AC I] and [DC I / I-Lkg] for more than two seconds.

If a reading is shown on the secondary display when a function button is pressed, the secondary display turns off and that function is selected for the primary display.

Measuring Voltage

The Meter is capable of measuring voltage up to 1000 V dc and 750 V ac.

⚠ Caution

To avoid possible damage to the Meter, do not apply voltage to the Meter's inputs until the test leads are properly connected and the proper voltage function is selected.

To perform a voltage measurement:

1. Connect test leads between the Meter and the circuit under test as shown in Figure 3-4.
2. Press DC V to measure dc voltage or AC V to measure ac voltage.

   The Meter selects the appropriate range in the autorange mode. The function and measurement are displayed.

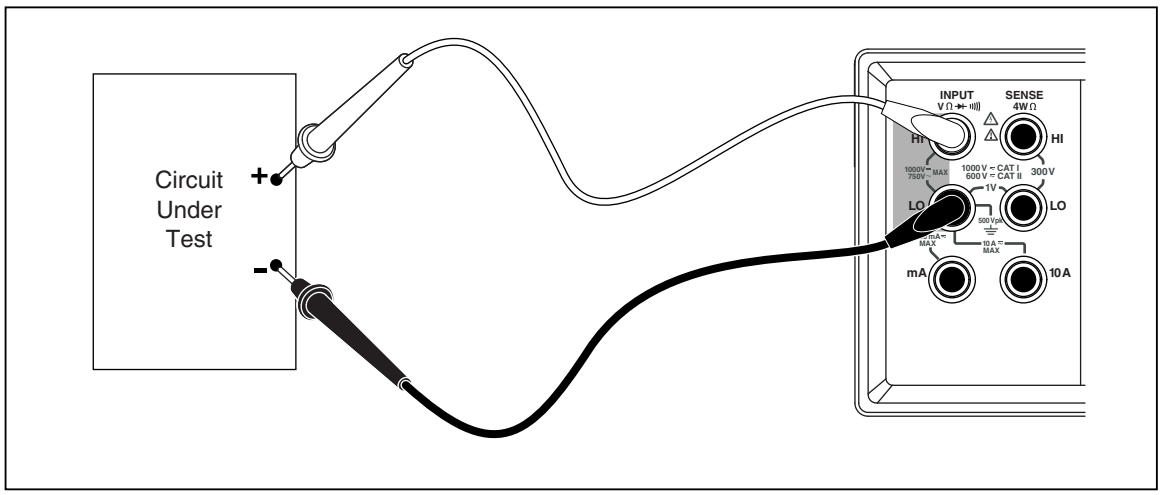

eue10.eps

Figure 3-4. Voltage and Frequency Measurement

Measuring Frequency

The Meter measures the frequency of ac signals between 20 Hz and 1 MHz.

To perform a frequency measurement:

1. Connect test leads between the Meter and the circuit under test as shown in Figure 3-4.
2. Press FREQ to measure the frequency of the ac signal.

   The function and measurement are displayed.

Frequency Ranging

Frequency measurements are automatically ranged so that a frequency measurement is always displayed with maximum resolution.

To select a range manually, press FREQ to select the frequency function, and then press ▲ or ▼ to select a range manually. Manual ranging can be performed on readings displayed in the primary display only.

If you manually select a frequency range and the measurement exceeds the full-scale value of that range, OL is displayed to indicate an overload. If the frequency is lower than 20 Hz, UL is displayed. Refer to the "Electrical Specifications" section in Chapter 1 for frequency ranges and full-scale values.

Measuring Resistance

The Meter offers 2-wire and 4-wire ohms measurement. Press Ω to toggle between 2-wire and 4-wire measurement modes. The Meter displays 2*4 Wire at 2 wire or 2x4 wire resistance measurement and displays 4 Wire at 4 wire resistance measurement.

2-Wire Resistance Measurement

To perform a 2-wire resistance measurement:

1. Connect test leads between the Meter and the circuit under test as shown in Figure 3-5.
2. If required, press Ω to select 2-wire resistance measurement mode. 2*4 Wire is displayed.

   The function and measurement are displayed.

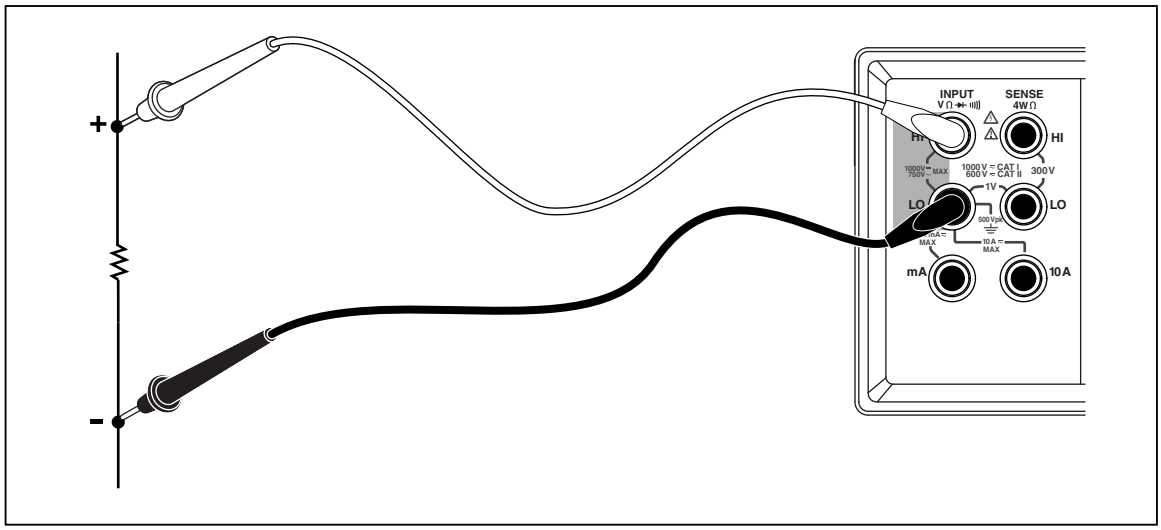

eue11.eps

Figure 3-5. 2-Wire Resistance Measurement

4-Wire Resistance Measurement

The Meter incorporates two methods of making a four-wire resistance measurement. The traditional method is to use four meter leads to connect the Meter to the resistance to be measured. The optional 2X4 Wire test leads simplifies the four-wire measurement so you only have to plug in two test leads to the **Input HI** and **LO** connectors of the meter.

To perform a 4-wire resistance measurement using four test leads:

1. Connect test leads between the Meter and the circuit under test as shown in Figure 3-6.
2. If required, press Ω to select 4-wire resistance measurement mode. 4 Wire is displayed.

   The function and measurement are displayed.

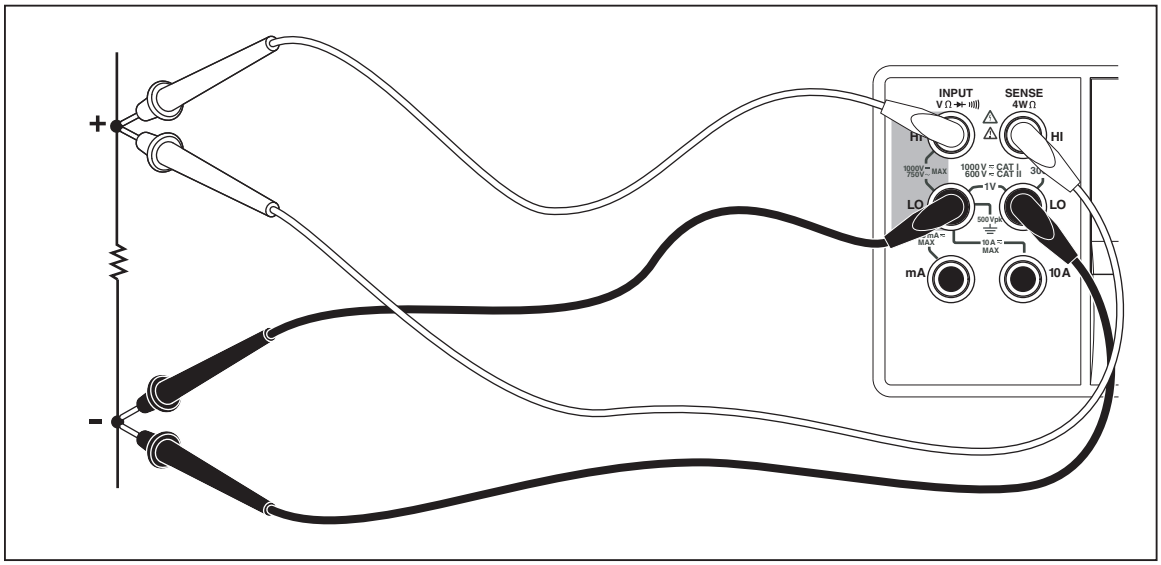

eue12.eps

Figure 3-6. 4-Wire Resistance Measurement

To make a four-wire resistance measurement using Fluke's 2X4 test leads:

1. Connect the test leads to the Meter's input connectors as show in Figure 3-7.
2. Press Ω. 2*4 Wire is displayed.

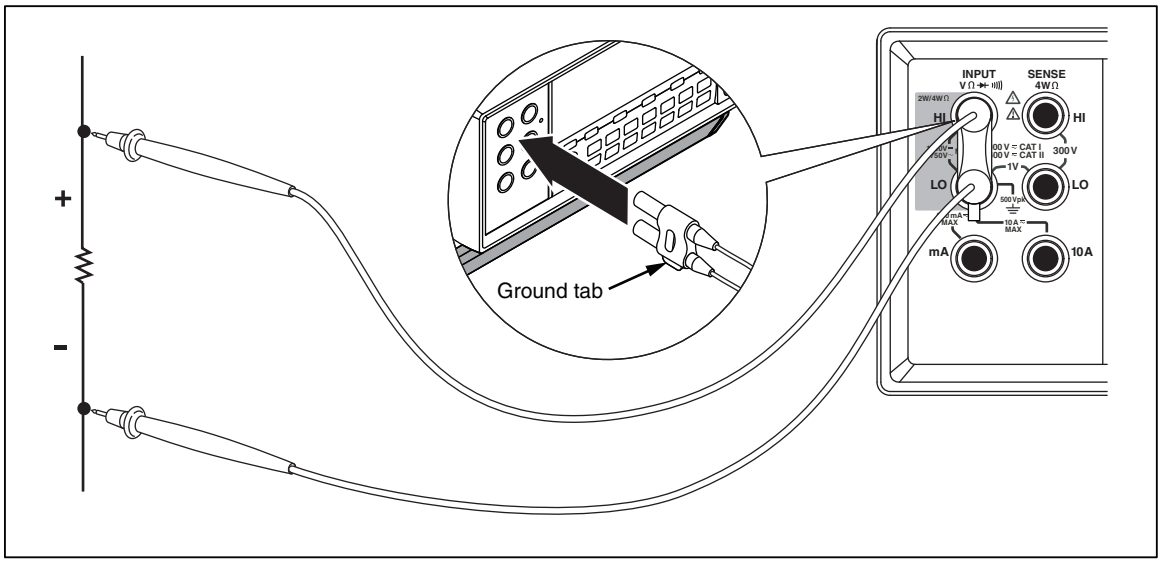

eue26.eps

Figure 3-7. Input Connections for 4-Wire Ohms Using 2x4 Wire Leads

Measuring Current

⚠ Caution

To avoid blowing the current fuse or damaging the Meter, do not apply power to the circuit under test until test leads are properly installed to the appropriate input terminals. For current measurements above 200 mA, install the test leads into the 10 A and LO terminals only.

The Meter is capable of making ac and dc current measurements up to 10 A.

To perform a current measurement:

1. Turn off power to the circuit under test.
2. Connect test leads between the Meter and the circuit under test.
3. If the circuit current is unknown, start by using the 10 A and LO terminals.
4. If the measurement is expected to be below 200 mA, connect the test leads to the 200 mA and LO terminals only and remove any leads in the 10 A terminal. See Figure 3-8.
5. For measurements expected to be 200 mA to 10 A, connect the test leads to the 10 A and LO terminals only. See Figure 3-9.
6. Press AC I to measure ac current or press DC I I-Lkg to measure dc current.
7. Apply power to the circuit under test.

   The Meter selects the appropriate range in autorange mode. The function and measurement are displayed.

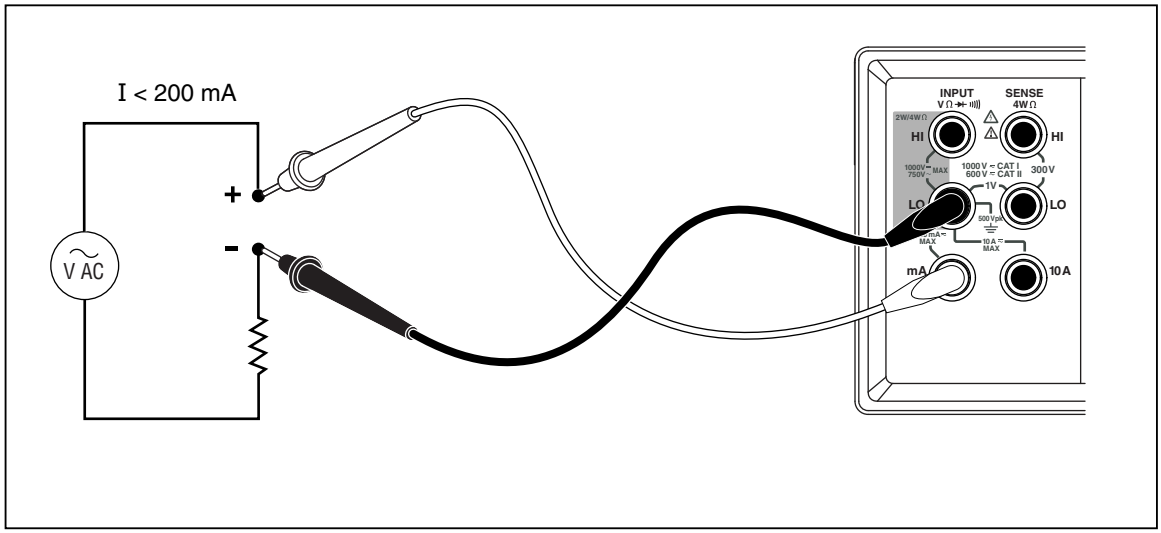

eue13.eps

Figure 3-8. Current Measurement <200 mA

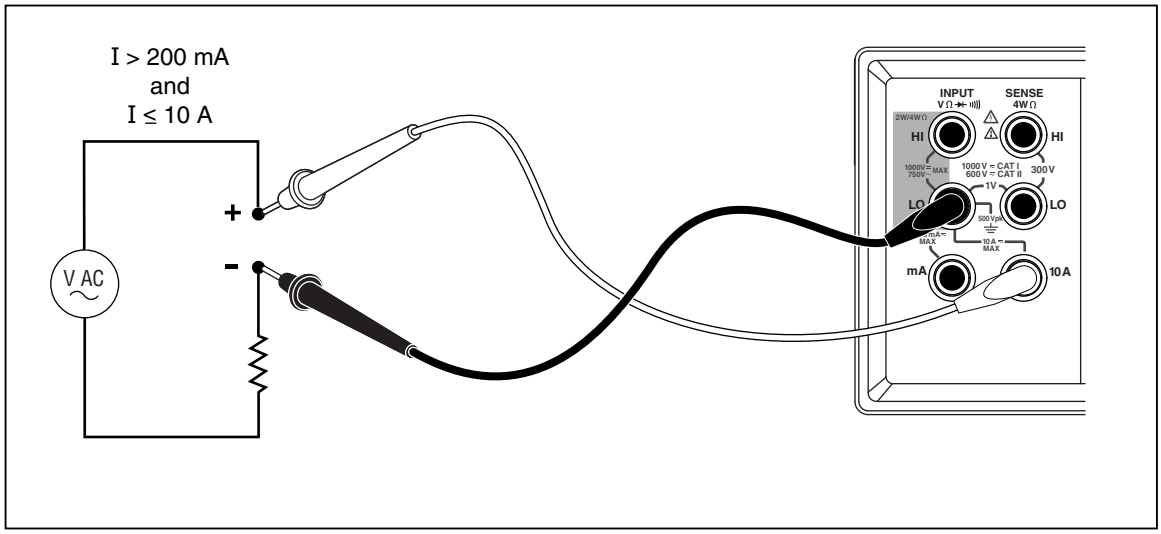

eue14.eps

Figure 3-9. Current Measurement 200 mA to 10 A

Automatic Input Terminal Detection

For ac and dc current measurement functions, the Meter automatically detects the signal input between the **mA** and **10 A** input terminals. A front-panel annunciator indicates whether the Meter is in the mA or A ranges.

If a test lead is inserted in to the **mA** input terminal and there isn't a test lead in the **10 A** terminal, then only the 200 µA to 200 mA ranges are selectable. If the **10 A** terminal has a test lead, then only the 2 A and 10 A ranges are selectable.

Diode / Continuity Testing

Press to toggle between the continuity and diode test functions for the primary display. (These functions cannot be selected for the secondary display.)

To perform a continuity test:

1. If required, press to select the continuity test function.
2. Connect the test leads between the Meter and the circuit under test as shown in Figure 3-10.

   The beeper emits a continuous tone if the input is below 20 Ω.

To perform a diode or transistor junction test:

1. If required, press to select the diode test function.
2. Connect the test leads between the Meter and the diode or transistor junction as shown in Figure 3-11.

   The forward voltage of the semiconductor junction (or junctions) is measured. Readings are displayed in the 2 V range at the fast measurement rate. The Meter displays OL if the input is above +2 V.

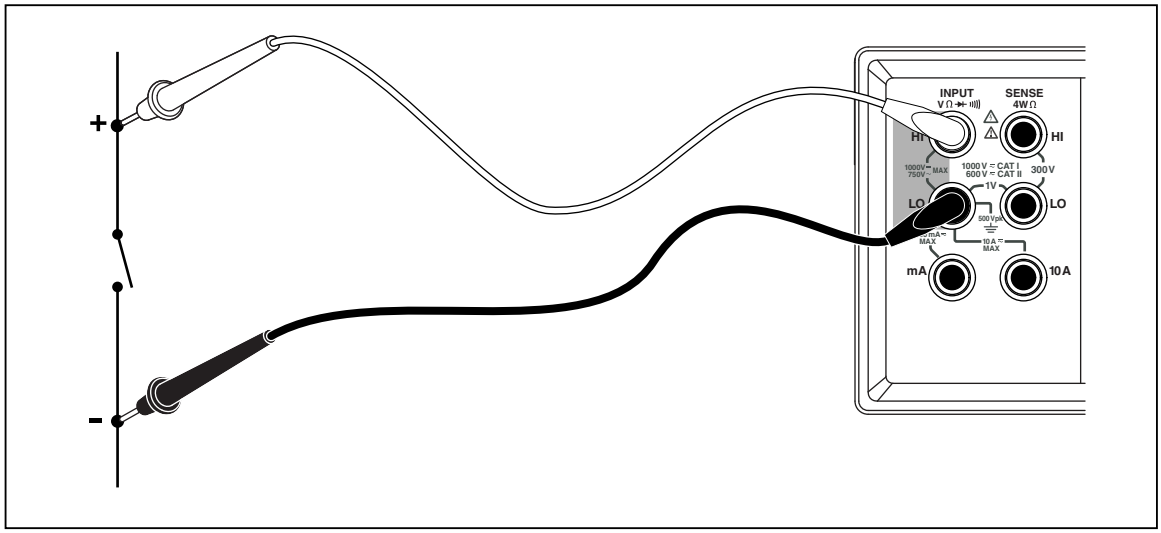

eue15.eps

Figure 3-10. Continuity Test

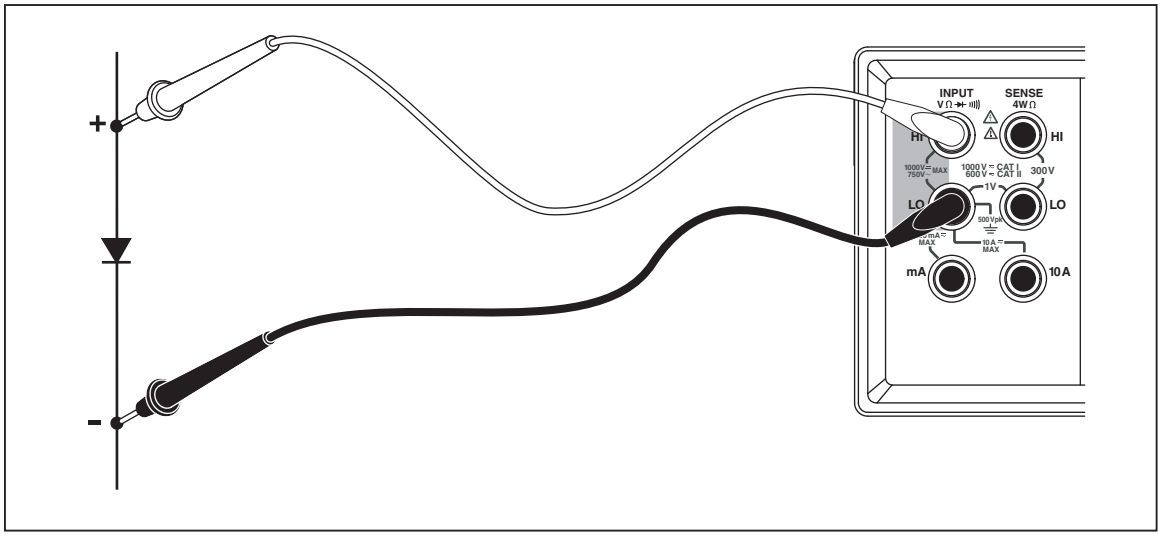

eue16.eps

Figure 3-11. Diode Test

Making a Triggered Measurement

The Meter features a trigger function that allows you to select a measurement trigger source. When the trigger mode is set to 3 or 5, the delay between receiving the trigger and the start of a measurement is 400 ms. Refer to Chapter 1 for trigger delay response specifications. Upon completion of each measurement, a “measurement-complete” signal (low-true pulse) is sent to the external trigger terminal on the rear panel. See the “Electrical Specifications” section in Chapter 1 for information on this signal.

The following sections discuss triggering the Meter automatically using its internal trigger, or externally using the trigger key on the front panel and the trigger terminal on the rear panel.

Setting the Trigger Mode

There are five possible sources for triggering a measurement:

- Mode 1 is automatic. Measurements are triggered internally and are continuous and occur as fast as the configuration will allow.
- Mode 2 is triggered without delay using [RATE TRIG].
- Mode 3 is triggered with delay using [RATE TRIG].
- Mode 4 is triggered without delay by an external signal.
- Mode 5 is triggered with delay by an external signal.

To select a trigger source:

1. Press [SHIFT] then [RATE TRIG].
2. Press ▲ or ▼ to choose the trigger mode.
3. Press RANGE and hold for 2 seconds to save the selected mode.

Connecting to an External Trigger

The Meter provides two external trigger connection methods for different operation modes. Table 3-4 shows the layout of the TRIG/IO_RS232 connector.

An external TTL signal on pin 9 will trigger a measurement cycle. Alternatively, pin 9 of the RS-232 interface can be connected to pin 1 through an external switch. See Figure 3-12. A measurement cycle is trigger when the switch is closed and the +5 volts from pin 1 is applied to pin 9. The trigger event occurs on the rising edge of the signal applied to pin 9.

Table 3-4. RS-232 Pin Out

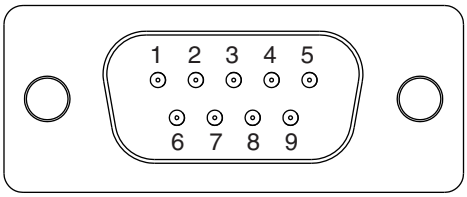

eue23.eps

Pin #	Description	Pin #	Description
1	+5 V OUT	2	RS-232 RXD
3	RS-232 TXD	5	RS-232 GND
6	Trigger Out	9	Trigger In

Figure 3-12 shows a method for using the +5V OUT (pin 1) signal with an external switch to trigger the Meter.

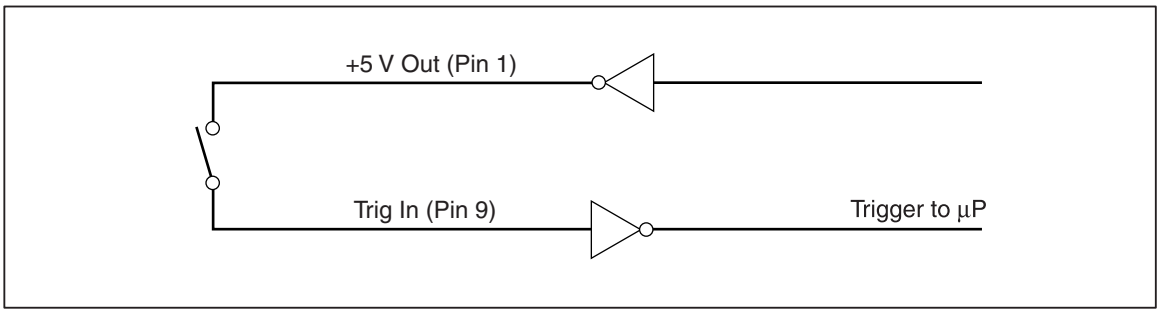

eue24.eps

Figure 3-12. External Trigger Circuit

Selecting a Function Modifier

This section describes the function modifiers available with the Meter. Function modifiers are actions that the Meter performs on an input before a reading is displayed (for example, a comparison to another value). Function modifiers can be used in combination. See the “Using Function Modifiers in Combination” section later in this chapter.

To use a function modifier, press a measurement function button to select that function, and then press the function modifier button to modify that function. (For example, press DC V to select dc voltage measurement, and then press HOLD THRESH to select the Touch Hold function to hold the results of your measurement). Note that modified readings are shown on the primary display only.

After a function modifier is selected, pressing any function button turns off all modifiers, causes the secondary display to go blank, and returns unmodified readings to the primary display.

Relative Readings Modifier (REL)

The relative readings modifier displays the difference between the relative base and the input measurement. For example, if the relative base is 15.000 V and the present input measurement is 14.100 V, the display will show -0.900. Readings are shown on the primary display.

⚠⚠ Warning

To avoid electrical shock or damage to the Meter, do not touch the input terminals or test leads during measurement. Relative readings may not indicate the presence of dangerous voltages at the input terminals or test leads.

Note

Relative readings modifier cannot be selected if the display shows OL *(overload) or is blank.*

To make a relative reading, press [REL REF] to select the relative readings modifier. The last valid reading taken is stored as the relative base, the primary display zeroes out, and REL△ is shown on the primary display. (The secondary display is unaffected.)

To edit the relative base, use the number editor as described in the “Using the Number Editor” section later in this chapter.

Selecting the relative readings modifier turns off autoranging and locks the present range. Make sure you are in the correct range before pressing [REL REF]. If you press ▲ or ▼ after pressing [REL REF], the Meter exits the relative readings mode.

Decibels and Auto Power Modifier

The decibels modifier takes a voltage measurement, converts it to dBm (measure of decibels relative to one milliwatt), and displays the result on the primary display.

Press dB to toggle in and out of the decibels modifier. When the decibels modifier is selected, "dB" is shown on the primary display.

Decibels can be selected only when a voltage function is selected on the primary display (volts ac, volts dc, or volts ac + dc). Decibels are always displayed in a single, fixed range with 0.01 dB resolution. However, the basic measurement itself (volts ac for example) autoranges.

A voltage measurement is converted to dBm using the following formula (value is the measurement value):

$$dBm = 10\log\left(\frac{1000 * Value^2}{R_{ref.}}\right)$$

The reference impedance can be set to any of 21 reference impedances listed in Table 3-5 by using the list editor as described in the "Using the List Editor" section later in this chapter.

Table 3-5. dBM Reference Impedances

Impedance	Impedance	Impedance
8000 Ω	300 Ω	93 Ω
1200 Ω	250 Ω	75 Ω
1000 Ω[1]	150 Ω	50 Ω
900 Ω	135 Ω	16 Ω[2]
800 Ω	125 Ω	8 Ω[2]
600 Ω	124 Ω	4 Ω[2]
500 Ω	110 Ω	2 Ω[2]

[1] Voltage annunciator lit
[2] Audio power readings possible

To access the reference impedance list, press [SHIFT] then press [dB REF Ω]. The reference impedance currently selected is displayed, along with the "db" and "ohm" annunciators. Press ▲ or ▼ to scroll to the desired value, then press RANGE to select a reference impedance and return the primary display to the measurement function. Press any function or modifier button to exit the reference impedance list without selecting a new value.

Setting the dB reference resistance to 16, 8, 4, or 2 ohms allows you to use the Meter to calculate audio power. After the reference resistance has been set to 16, 8, 4, or 2 ohms, press [dB REF Ω] twice to select the audio power modifier. Power annunciator will be displayed.

The following equation is used to make a power calculation (volts is the measurement value):

$$Audio\ \ Power = \frac{Volts^2}{R_{ref}}$$

Touch Hold Function (HOLD)

The Touch Hold function holds the results of your measurements on the display. Touch Hold is helpful in difficult or hazardous circumstances when you want to keep your eyes fixed on the probes and reading the display only when it is safe or convenient to do so. When a new, stable reading is detected, a beep is emitted and the display is automatically updated.

To select the Touch Hold function, press [HOLD THRESH]. HOLD is displayed. In Touch Hold, each time you press [HOLD THRESH], a new reading is displayed. To exit the Touch Hold function, press and hold [HOLD THRESH] for 2 seconds.

If you are in the autorange mode when Touch Hold is selected, you will autorange to the correct range. If you are in the manual range mode when Touch Hold is selected, you will be in the fixed range you were in when Touch Hold was selected.

The Touch Hold function can be combined with the minimum/maximum modifier to hold and update only when a new minimum or maximum value is detected. To force the display to update, with Touch Hold selected press [HOLD THRESH] for less than 2 seconds.

The Meter allows you to choose the minimum response level needed for Touch Hold to capture and display a measurement. You can choose from the following four response levels:

- Level 1 (0.01 % of reading)
- Level 2 (0.1 % of reading)
- Level 3 (1 % of reading)
- Level 4 (10 % of reading)

To change the response level, press SHIFT and HOLD THRESH. The response level currently selected (1, 2, 3 or 4) appears on the primary display. Press ▲ or ▼ to step to the desired response level, then press RANGE for two seconds to set the level and return to the primary display. You can return to the primary display without changing the response level by pressing any button *except* RANGE, ▲ or ▼.

Minimum / Maximum Modifier (MIN MAX)

The minimum/maximum (MIN MAX) modifier stores the minimum and maximum inputs of your measurements.

Selecting the MIN MAX modifier turns off autoranging and locks in the present range, so make sure you are in the correct range before pressing MIN MAX. If you press ▲ or ▼ after pressing MIN MAX, the Meter exits the MIN MAX modifier mode.

To store the minimum and maximum inputs:

1. Press MIN MAX to select the MIN MAX modifier.

   When MIN MAX is first pressed, the minimum and maximum values are set to the reading displayed. MAX is shown and the display indicates the latest maximum reading.

2. Press MIN MAX again to display the minimum reading. MIN is shown and the display indicates the latest minimum reading.
3. Press MIN MAX again to display either the minimum or maximum reading. MINMAX is shown and the display indicates either the minimum or maximum reading.
4. To exit MIN MAX mode, press and hold MIN MAX for 2 seconds.
5. To observe the actual readings without resetting the stored values, press SHIFT and then select the same measurement function that you selected for the primary display.

Using the Function Modifiers in Combination

You can use multiple function modifiers simultaneously.

Selected modifiers are evaluated in the following order: Touch Hold, minimum/maximum, and then relative readings. The Meter first looks for a stable measurement for Touch Hold, then determines if the measurement is a new minimum or maximum value, and then subtracts the relative base from the measurement.

When using multiple modifiers, the order in which you select the modifiers affects how the modes will respond. For example, if you are in minimum/maximum mode, if you press [REL REF], the value currently displayed becomes the relative base. Pressing [MIN MAX] then displays the difference between the minimum and maximum values. Additionally, if you are in the relative readings mode, pressing [MIN MAX] displays the difference between the relative base and the minimum or maximum value (as applicable).

Second Level Operations (Using the SHIFT Button)

Pressing [SHIFT] causes the next button pushed to perform its second level operation. Second level operations are printed in red on their respective buttons. When [SHIFT] is pressed, **Shift** is displayed.

See Table 3-6 for descriptions of second level operations and the buttons used to invoke the operations.

Table 3-6. Second Level Operations

Buttons	Description
[SHIFT] then [AC V]	Shows volts ac reading in secondary display
[SHIFT] then [DC V]	Shows volts dc reading in secondary display
[SHIFT] then [AC I]	Shows amperes ac reading in secondary display
[SHIFT] then [DC I / I-Lkg]	Shows amperes dc reading in secondary display
[SHIFT] then [FREQ]	Shows frequency reading in secondary display
[SHIFT] then [Ω]	Shows ohms reading in secondary display
[SHIFT] then [HOLD THRESH]	Sets Touch Hold sensitivity threshold
[SHIFT] then [REL REF]	Edits relative base and places the Meter into relative readings mode (see the “List and Number Editor” section later in this manual)
[SHIFT] then [PRINT BAUD]	Sets communication parameters (RS-232), including baud rate, parity, echo
[SHIFT] then [RATE TRIG]	Sets the trigger mode.
[SHIFT] then [SHIFT]	Turns off secondary display (primary display unaffected)
[SHIFT] then [▼]	Edits compare mode low point (see the “Using the Compare Function” section later in this manual)
[SHIFT] then [▲]	Edits compare mode high point (see the “Using the Compare Function” section later in this manual)
[SHIFT] and [REL REF] [1]	In relative mode, toggles display of relative base in secondary display
[SHIFT] and [RATE TRIG] [1]	Displays software version

Table 3-6. Second Level Operations (cont.)

Buttons	Description
SHIFT and ▼ [1]	In COMP mode, stores value on primary display as LO compare point (see the "Using the Compare Function" section later in this manual)
SHIFT and ▲ [1]	In COMP mode, stores value on primary display as HI compare point (see "Using the Compare Function")
[1] Hold both buttons for 2 seconds.	

Compare Function (COMP)

The Meter has a compare function (COMP) that provides an easy way to determine if a reading falls within a designated range of values. The compare function can be used with any function modifier.

Setting the Compare Range

Before selecting the compare function, you need to set the tolerance range against which the reading that will be compared. This can be done in any of the following three ways:

- Press COMP to enter the compare function mode. The reading displayed when you enter the mode can be set to the high or low threshold. To set the reading as the high limit, press and hold Shift and ▲ for 2 seconds. To set the reading as the low limit, press and hold Shift and ▼ for 2 seconds. The Meter beeps to indicate the limit has been set. If the display is blank or shows OL (overload), the limit could not be set and the high and low limits remain as previously set.
- Use the number editor as described in the "Using the Number Editor" section later in the chapter. (Before entering the number editor, be sure you are in the appropriate range.) The decimal point and input range are fixed according to the range in the editor.
- Use the computer interface commands `COMPHI` and `COMPLO` to set the high and low compare points remotely. See the "Compare Commands and Queries" section in Chapter 4.

Using the Compare Function

To select the compare function, press COMP. When the compare function is first selected, the Touch Hold function is also activated and HOLD is displayed. To turn off Touch Hold, press and hold HOLD THRESH for 2 seconds. The secondary display will then update with each new reading.

When a stable value is detected, the Meter beeps if hold is on and the reading is shown in the primary display. If the value is within the range you set, PASS is shown in the secondary display. If the value is not within the set range, HI or LO is shown as applicable in the secondary display.

List and Number Editors

The Meter has a list editor and number editor. The list editor allows you to scroll through and select from a list of options. The number editor allows you to enter or edit a numeric value.

Editing is performed in the primary display. Normal operation of the Meter is interrupted when either editor is invoked. If a computer interface command is received by the Meter during editing, the edit is aborted and the Meter returns to normal operation. The item being edited is not changed.

Using the List Editor

The list editor is used to select the options described in Table 3-7. You may abort an edit and return to normal operation at any time by pressing [SHIFT].

To use the list editor:

1. Select the option list that you want to edit by pressing the applicable button(s) as indicated in Table 3-7. The option list type is shown in the secondary display and the associated options are shown in the primary display.
2. Press ▲ or ▼ to step through the options. (Hold either button to scroll through the options.) As you step through the list, only the selected option is shown in normal intensity (bright) while the others are dim.
3. When the desired option is shown, press RANGE to select it. The selected option is then displayed in normal intensity (bright).

Table 3-7. List Editor Options

To Set	Buttons	Options	Annunciator
Touch Hold minimum response level	[SHIFT] then [HOLD THRESH]	1 = 0.1 % of reading 2 = 1 % of reading 3 = 5 % of reading 4 = 10 % of reading	Hold
RS-232 print-only mode (if RS-232 interface is selected)	[PRINT BAUD]	0,1,2,5,10,20,50,100, 200, 500,1000,2000, 5000,10000,20000, or 50000	Print
RS-232 baud rate	[SHIFT] then [PRINT BAUD]	300,600,1200,2400, 4800, 9600, or 19200	baud
	Data bits	8 7	data
	Parity options	E = Even Odd = Odd No = None	Par
	Stop bit	1 2	StoP
	Echo mode	On Off	Echo
Trigger mode	[SHIFT] then [RATE TRIG]	1, 2, 3, 4, 5	tri

Using the Number Editor

Use the number editor to edit the relative base for the relative readings modifier and to set the high and low threshold values for the compare function.

Note that you can abort the number editor and return the Meter to normal operation by pressing [SHIFT].

To use the number editor:

1. Select the number to be edited by pressing the applicable buttons as shown in Table 3-8.

   The last number entered or value measured is displayed with the leftmost digit bright and the remaining digits dim. (If the number is negative, the minus sign is bright.) Related annunciators are displayed.

Table 3-8. Number Editor Options

Buttons	Number Editor Invoked for
[SHIFT] then ▼	Low threshold limit for compare mode
[SHIFT] then ▲	High threshold limit for compare mode
[SHIFT] then [REL REF]	Relative base for relative readings modifier

2. Press ▲ or ▼ to increment or decrement the highlighted digit to the desired number (from 0 to 9). When the digit is set to the desired number, press S1 through S6 to select the next digit to edit. S1 corresponds to the left-most digit and S6 corresponds to the right-most digit. Repeat this step until you have set all the digits to their desired values.
3. When the value has been set, press COMP to toggle the sign between positive and negative. If the sign is positive, the negative sign (–) is off. If the sign is negative, the negative sign (–) is on.
4. For Low/High threshold, press RANGE to select the desired range for threshold values. The range goes one step up by pressing RANGE once. If the range reaches the top range, the next press wraps back to range 1 and the value will be cleared.
5. When you are finished editing the number, press and hold RANGE for 2 seconds to store the value.

Function Keys S1 – S6

Function keys [S1] through [S6] allow you to save and recall up to six measurement configurations. This helps speed the process of setting up the Meter, and is particularly useful if you repeatedly need the same configurations.

To save the present configuration, press [SHIFT] and then press the function key to which you want to store the configuration.

To recall a configuration, press the applicable function key. A beep sounds when the configuration is ready for use, and Setup 9 indicates the number of the latest stored configuration.

When a configuration is stored, it includes the following:

- Measurement function and initial range on primary display

- Measurement function on secondary display
- Range mode on primary display (manual or autorange)
- Measurement rate (slow, medium, fast)
- Dual display status (active or inactive)
- Any combination of selected function modifiers
- Touch Hold level (1, 2, 3, 4)
- Last recorded minimum and maximum values for MINMAX modifier
- Last recorded relative base
- Relative base shown in secondary display (enabled or disabled)
- Last HI-LO settings in compare mode
- Trigger mode (1, 2, 3, 4, 5)
- Echo setting (on or off)
- dB and dB reference
- RS-232 settings
- PRINT mode
- Data format (with or without UNIT) sending through the RS-232

Power-Up Configuration

When the Meter is turned on and the power-up sequence is complete, the Meter defaults to the power-up configuration listed in Table 3-9.

The RS-232 baud rate, parity, and echo mode are not changed when power is cycled off and on. These parameters remain as set until changed by the user.

Table 3-9. Factory Power-Up Configuration

Parameter	Configuration
Function setting	DC volts
Range mode	Autorange
Reading rate	Slow (2.5 readings/second)
Touch Hold sensitivity level	1 (0.01% of reading)
High/low values for Compare mode (COMP)	0
Minimum and maximum values in MIN MAX modifier	0
Relative base	0
Relative base in secondary display	Disabled
Trigger type	1 (Internal)
Trigger trype	0

Calibration

Refer to the 8808A *Calibration Manual* for instructions on calibrating the Meter.

Chapter 4
Operating the Meter Using the Computer Interface

Title **Page**

Introduction 4-3
Local and Remote Operations 4-3
Computer Interfaces 4-3
Preparing the Meter for Operations via the RS-232 Interface 4-3
Setting Communication Parameters (RS-232) 4-3
RS-232 Print-Only Mode 4-4
Cabling the Meter to a Host or Printer (RS-232) 4-5
Character Echoing and Deletion 4-6
Device Clear Using ^C (CNTRL C) 4-6
RS-232 Prompts 4-6
Getting Started with an Installation Test 4-6
Installation Test for RS-232 Operation 4-6
If Test Fails 4-7
How the Meter Processes Input 4-7
Input Strings 4-7
Input Terminators 4-7
Sending Numeric Values to the Meter 4-8
Sending Command Strings to the Meter 4-8
How the Meter Processes Output 4-8
Triggering Output 4-9
External Triggering from the Front Panel 4-9
Setting the Trigger Type Configuration 4-10
External Trigger via the Computer Interface 4-10
Status Registers 4-11
Event Status and Event Status Enable Registers 4-12
Status Byte Register 4-14
Reading the Status Byte Register 4-15
Computer Interface Command Set 4-15
Common Commands 4-16
Function Commands and Queries 4-17
Function Modifier Commands and Queries 4-19
Range and Measurement Rate Commands and Queries 4-21
Measurement Queries 4-23

Compare Commands and Queries 4-24
Trigger Configuration Commands..... 4-24
Miscellaneous Commands and Queries..... 4-25
RS-232 Remote / Local Configurations 4-25
RS-232 Save / Recall System Configurations 4-26
Sample Program Using the RS-232 Computer Interface 4-27

Introduction

This chapter describes how to set up, configure and operate the Meter via the RS-232 computer interface on the Meter's rear panel. The Meter can be operated from a host (a terminal, controller, PC, or computer) by sending commands to the Meter through its computer interface.

An annotated sample program illustrating the use of the RS-232 computer interface is provided at the end of this chapter. Refer to Chapter 3 for complete descriptions of all Meter functions and features.

This chapter assumes that you are familiar with the basics of data communication and RS-232 interface.

Local and Remote Operations

When the Meter is operated from a host, it is said to be operated remotely. When the Meter is operated from its front panel, it is said to be operated locally.

Most operations that can be performed locally can also be performed remotely using the computer interface. Some operations, like setting communications parameters for the RS-232 interface operations, can only be performed from the front panel.

Computer Interfaces

The Meter comes equipped with an RS-232 (serial) interface. Using the interface turns the Meter into a fully programmable instrument that can be integrated into an automated instrumentation system.

Preparing the Meter for Operations via the RS-232 Interface

The RS-232 interface allows ASCII asynchronous serial communication between the Meter and a host, serial printer or terminal.

Setting Communication Parameters (RS-232)

Table 4-1 provides the RS-232 communication parameters factory settings. Setting RS-232 communication parameters is only performed through the front panel.

In order for the Meter and host to communicate via the RS-232 interface, the communication parameters of the Meter must match those of the host. If the communications parameters of the host and Meter do not match, set the appropriate baud rate and parity parameters as follows:

1. Press ⏻ to turn the Meter on.
2. Press SHIFT then PRINT BAUD. The baud rate currently selected is shown in the primary display and bAud is shown in the secondary display.
3. Press ▲ or ▼ to scroll to the desired baud, and then press RANGE to set the RS-232 baud rate.
4. Press ▲ or ▼ to scroll to the desired data bit (7 or 8) selection, then press RANGE to set parity. Echo appears on the secondary display, and On or OFF appears on the primary display.
5. To select an Echo mode, press ▲ or ▼ to select On or OFF, and then press RANGE to set the selected Echo state. When Echo is on, each command sent to the Meter over the RS-232 interface is echoed to the host's display screen. When Echo is off, commands are not echoed.

6. Press RANGE to review the settings. When you are ready to accept the settings, press and hold RANGE.

Table 4-1. RS-232 Communication Parameters Factory Settings

Parameter	Factory Setting
Interface	RS-232 (Print-only rate set to 0)
Baud rate	9600
Parity	None (parity bit 0)
Number of data bits	8 (7 data bits plus 1 parity bit)
Number of stop bits	1
Echo	Off

RS-232 Print-Only Mode

The print-only mode is used to send measurements to a printer or terminal automatically.

While the Meter will respond to remote commands during print-only operations, Fluke recommends first setting the Meter's echo mode to **OFF**. This prevents mixing echoed command characters and incoming data. Refer to the “Setting Communication Parameters (RS-232)” section earlier in this chapter.

In the print-only mode, the Meter sends every N-th reading shown on the primary and/or secondary displays out the RS-232 port, where N is the print rate. The print rate is selected from the available values described in Table 4-2. The duration between outputs is determined by the print rate and reading rate of the Meter. The minimum rates are 2.5/s at slow rate, 20.0/s at medium rate, and 100.0/s at fast rate. The output is formatted as one measurement per line from the primary display, or two measurements per line from the primary and secondary displays.

Perform the following procedure to select the print-only mode and to set the print rate (N):

Note

For frequency measurements, the reading rate is fixed at four readings per second. The reading rate is always fast for Diode and Continuity tests.

1. Press ⏻ to turn the Meter on.
2. Press PRINT BAUD. If the RS-232 interface is selected, Print is shown and the list editor is invoked on the print rate list.
3. Press ▲ or ▼ to scroll to the desired print rate as shown in Table 4-2, and press and hold RANGE for two seconds to select that rate. (Note that a print rate of 0 disables the print-only mode.) The Meter is now configured for RS-232 print-only operations. The Meter exits the list editor and returns to normal operation.

Table 4-2. Print Rates in RS-232 Print-Only Mode

Rate (N)	Seconds between Outputs			Minutes between Outputs			Hours between Outputs		
	Slow	Medium	Fast	Slow	Medium	Fast	Slow	Medium	Fast
1	0.4	0.05	0.01	0.01					
2	0.8	0.1	0.02	0.01					
5	2.0	0.25	0.05	0.03					
10	4.0	0.5	0.1	0.07	0.01				
20	8.0	1.0	0.2	0.13	0.02				
50	20.0	2.5	0.5	0.33	0.04	0.01	0.01		
100	40.0	5.0	1.0	0.67	0.08	0.02	0.01		
200	80.0	10.0	2.0	1.33	0.17	0.03	0.02		
500	200.0	25.0	5.0	3.33	0.42	0.08	0.06	0.01	
1000	400.0	50.0	10.0	6.67	0.83	0.17	0.11	0.01	
2000	800.0	100.0	20.0	13.33	1.67	0.33	0.22	0.03	0.01
5000	2000.0	250.0	50.0	33.33	4.17	0.83	0.56	0.07	0.01
10000	4000.0	500.0	100.0	66.67	8.33	1.67	1.11	0.14	0.03
20000	8000.0	1000.0	200.0	133.33	16.67	3.33	2.22	0.28	0.06
50000	20000.0	2500.0	500.0	333.33	41.67	8.33	5.56	0.69	0.14

Cabling the Meter to a Host or Printer (RS-232)

The Meter communicates with a host through a DB-9 interface connector on the rear panel of the Meter. A connector pinout for the RS-232 interface is provided on the rear of the Meter.

Note

When connecting the Meter to the host or terminal, use a cable appropriate to your application. It is recommended that you use a cable that is less than 50 feet long (15 meters), as this will help prevent performance degradation. Longer cables can be used if the load capacitance at the interface point (including signal terminator) is less than 2500 pf.

To connect the Meter to a personal computer (with DB-9 connector), use a Fluke RS41-3 Null modem cable. Refer to Table 1-3.

To connect the Meter to a specific brand of RS-232 printer, use the cable that would be used to connect that printer to an RS-232 port on a personal computer with a DB-9 connector.

Character Echoing and Deletion

When the Meter is operated via the RS-232 interface, you can control whether characters are echoed to the host's display screen.

When Echo is on, characters sent to the Meter are echoed on the host's display screen and prompts are returned. When Echo is off, characters are not echoed, and prompts are not returned. To set the Echo parameter, refer to the “Setting Communication Parameters (RS-232)” section earlier in this chapter.

If you send a character to the Meter over the RS-232 interface directly from a keyboard, pressing the <BACKSPACE> key deletes the previous character. A backspace is echoed to the display screen if Echo is on.

Device Clear Using ^C (CNTRL C)

^C (CNTRL C) causes “=>” followed by a carriage return and line feed to be output.

RS-232 Prompts

When the host sends a command to the Meter over the RS-232 interface, the Meter parses the command, executes it, returns a response (if appropriate), and then sends one of the following prompts:

`=>` No errors detected. Command was successfully parsed and executed. The interface is ready for another command.

`?>` Command error detected. Command was not executed because it was not understood. For example, the Meter received an input string that contained a syntax error.

`!>` Execution error or device-dependent error detected. Command was understood, but not executed. For example, user attempted to use FREQ to perform a VDC measurement.

Getting Started with an Installation Test

After the Meter is cabled to a host per “Cabling the Meter to a Host or Printer (RS-232)” and is prepared to communicate with the host via the RS-232 interface, test the system as follows to verify that it is operational.

Installation Test for RS-232 Operation

This procedure confirms that the Meter is properly set up and cabled for remote operations:

1. Press ⏻ to turn the Meter on.
2. Verify that the computer interface parameters (baud, parity, etc.) are set correctly.
3. Turn the host on.
4. Type `*IDN?` and press Enter.
5. Verify that the Meter sends the following response:

   ```
   FLUKE, 8808A, nnnnnnn, n.n Dn.n
   ```

   Where `nnnnnnn` is the Meter’s serial number; `n.n` is the main software version; and `Dn.n` is the display’s software version.

6. If the Meter does not respond as indicated, refer to the “If Test Fails” section.

If Test Fails

If the Meter does not respond as indicated in the “Installation Test for RS-232 Operation” section, perform the following:

1. Ensure all cables are properly connected. See the “Cabling the Meter to a Host or Printer (RS-232)” section earlier in this chapter.
2. Ensure that the communication parameters (baud rate, parity, etc.) on the Meter and host are identical. See the “Setting Communication Parameters (RS-232)” section earlier in this chapter.

How the Meter Processes Input

The following sections describe how the Meter processes input received from a host or stand-alone terminal.

Note

In this Chapter, “input” means a string sent to the Meter from a host, and “output” means a string sent to the host from the Meter through the computer interface.

Input Strings

The Meter processes and executes valid input strings sent by the host. A valid input string is one or more syntactically correct commands followed by an input terminator.

When the Meter receives input, it stores it in a 50-byte input buffer.

Note

Input strings received over the RS-232 interface are not executed or checked for proper syntax until an input terminator is received or the input buffer becomes full.

The Meter accepts alphabetic characters in uppercase and lowercase. If a command cannot be understood, the command and the rest of the command line are ignored.

Input Terminators

When the Meter receives an input terminator, it executes commands on a first-in first-out basis as entered since the last terminator was received.

As input characters are processed and executed, space is made available in the input buffer for new characters. In RS-232 applications, if a communication error (parity, framing, overrun) is detected, a device-dependent error is generated and the input string is discarded. If the Meter's input buffer becomes full when it is used with the RS-232 interface, a device-dependent error is generated (see “Event Status and Event Status Enable Register”) and the input string is discarded.

Valid terminators for the RS-232 interface are:

- CR (Carriage Return)
- LF (Line Feed
- CR LF (Carriage Return/ Line Feed)

In some instances, a terminator is automatically transmitted at the end of the host's output string (the Meter's input string).

Sending Numeric Values to the Meter

Numeric values can be sent to the Meter as integers, real numbers, or real numbers with exponents, as shown in the following examples:

+12345689	Sends the signed integer "12345689"
-1.2345E2	Sends "-1.2345E2" or "-123.45"

Sending Command Strings to the Meter

Observe the following rules when you construct strings to be sent to the Meter over the computer interface:

- Rule 1: Read meter's output buffer once for each query command.

  The Meter's output buffer is cleared after it has been read. This prevents previously read data from being read a second time by mistake. If you attempt to read the Meter's output buffer twice without an intervening query, the Meter will not respond to the second read.

- Rule 2: Read query responses before sending another command string.

  Output data remains available in the output buffer until the host reads it or until the next command string is received by the Meter. This means the host must read the Meter's output buffer before the next command string is sent to the Meter.

- Rule 3: The meter executes each command completely in the order received before moving on to the next command.

  If an input string contains a trigger, enter the commands in the following order:

  1. Commands to configure the Meter (if any)
  2. The trigger command
  3. Commands to read the result of a triggered measurement (`VAL?`), or to reconfigure the instrument (if any)
  4. The terminator

Note

If `MEAS?`, `MEAS1?` *or* `MEAS2?` *is used, the command should follow Configure, Trigger.*

How the Meter Processes Output

The following paragraphs describe how the Meter processes output. The Meter outputs an alphanumeric string in response to a query command from the host. (Query commands end with "?".) Output strings for RS-232 applications are terminated with a Carriage Return and Line Feed (<CR><LF>).

After sending the Meter a command via the RS-232 interface, wait for the Meter to return a prompt before sending another command. Failure to do so causes a device-dependent command error, and the second string is discarded.

Numeric output from the Meter is shown in the following examples:

+1.2345E+0(format 1)	Measured value of 1.2345

+1.2345E+6(format 1)	Measured value of 1.2345M
+12.345E+6 OHM(format 2)	Measured value of 12.345Mohms
+/- 1.0E+9	Overload (OL on the display)

Triggering Output

The Meter takes measurements when triggered to do so. There are five trigger types, which are described in Table 4-3. Triggers fall into two basic categories:

- Internal trigger, which triggers measurements continuously.
- External trigger, which triggers a measurement at the direction of the user.

A measurement can be externally triggered as follows:

- External trigger with rear trigger disabled. This includes trigger types 2 and 3, as described in Table 4-3.
- External trigger with rear trigger enabled. This includes trigger types 4 and 5, as described in Table 4-3.
- *TRG command

For use of the `*TRG` command, see "Common Commands."

Table 4-3. Trigger Types

Type	Trigger	Rear Trigger	Settling Delay
1	Internal	Disabled	—
2	External	Disabled	Off
3	External	Disabled	On
4	External	Enabled	Off
5	External	Enabled	On

External Triggering from the Front Panel

To enable external triggering from the front panel, perform the following procedure:

1. Press [SHIFT] then [RATE TRIG]. Ext Trig and a number corresponding to the selected trigger type (1, 2, 3, 4, or 5) are displayed. See Table 4-3 for trigger types.
2. Press ▲ or ▼ to step through the trigger type list. Highlight the trigger type as follows, and then press RANGE for two seconds to select it.

   Select trigger type 2 to disable the settling delay; or select trigger type 3 to enable the settling delay. See Table 4-3 for typical settling delays.

   When trigger type 2 or 3 is selected, Ext Trig is displayed confirming that you are not in the remote mode and an external trigger is enabled. (If you are not in the remote mode, you will not be able to trigger measurements from the front panel.)
3. Press [RATE TRIG] to trigger a measurement. (Each time you press [RATE TRIG] you trigger a measurement.)
4. To return the Meter to its internal (continuous) trigger state, perform step 3 and select trigger type 1.

If you enter the remote mode with trigger type 4 or 5 selected, the Meter remains in its external trigger state; however, because the Meter is in the remote mode, you will only be able to trigger measurements with rear trigger types 4 and 5. To exit remote mode, perform steps 1 and 2 and select trigger type 2 or 3 (as applicable).

Note

*In external trigger mode (mode 2 to mode 5), *TRG command is always available.*

Setting the Trigger Type Configuration

To set the trigger type configuration using the computer interface, enter the command `TRIGGER` <*type*> (where <*type*> is the trigger type) and press Enter. See Table 4-3 for trigger types.

Select trigger type 3 or 5 to enable the settling delay if the input signal is not stable before a measurement is triggered. Typical settling delays are provided in Table 4-3. RS-232 reading transfer rates are provided in Table 4-4.

Table 4-4. RS-232 Reading Transfer Rates

Rate	Readings per Second	
	Internal Trigger Operation (Trigger 1)	External Trigger Operation (Trigger 4)
Slow	2.5[1]	2.5[2]
Medium	20[1]	20[2]
Fast	100[1]	100[2]

[1] Depends on A/D trigger speed.

[2] Depends on how fast the trigger signal is transmitted.

External Trigger via the Computer Interface

To trigger a measurement using the RS-232 computer interface, enter the command `*TRG` and press Enter. See the “Common Commands” section later in this chapter for use of `*TRG` command.

To trigger a measurement using pin 9 of the RS-232 interface, see Figure 4-1.

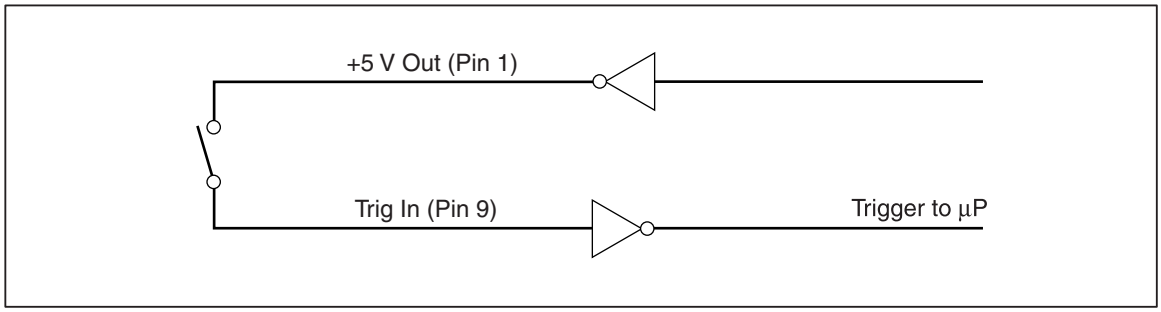

eue24.eps

Figure 4-1. External Trigger Using Pin 9 of RS-232 Interface

Status Registers

The contents of the status register (STB) are determined by the service enable register (SRE), event status register (ESR), event status enable register (ESE), and the output buffer. These status registers are explained in the following paragraphs and summarized in Table 4-5.

Figure 4-2 shows the relationship of these registers.

Table 4-5. Status Register Summary

Register	Read Command	Write Command	Enable Register
Event Byte Register	*STB?	None	SRE
Service Request Enable Register	*SRE?	*SRE	None
Event Status Register	*ESR?	None	ESE
Event Status Enable Register	*ESE?	*ESE	None

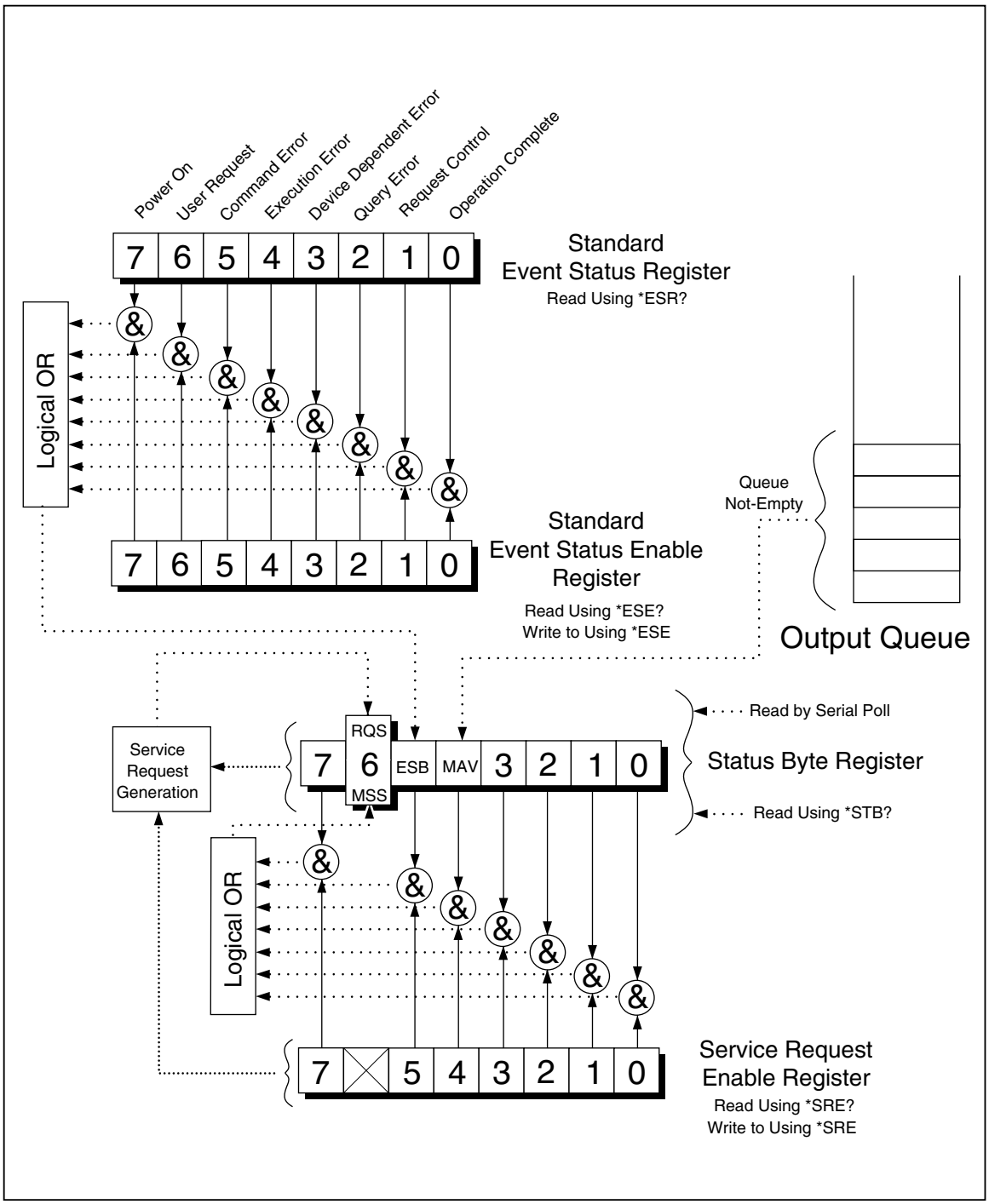

aam21f.eps

Figure 4-2. Overview of Status Data Structures

Event Status and Event Status Enable Registers

The ESR assigns specified events to specific bits. (See Figure 4-3 and Table 4-6.) When a bit in the ESR is set to 1, the event that corresponds to that bit occurred after the register was last read or cleared. For example, if bit 3 (DDE) is set to 1, a device-dependent error has occurred.

The ESE is a mask register that allows the host to enable or disable (mask) each bit in the ESR. When a bit in the ESE is set to 1, the corresponding bit in the ESR is enabled. When any enabled bit in the ESR changes from 0 to 1, the ESB bit in the STB also changes to 1. When the ESR is read using the `*ESR?` command or cleared using the `*CLS` command, the ESB bit in the STB returns to 0.

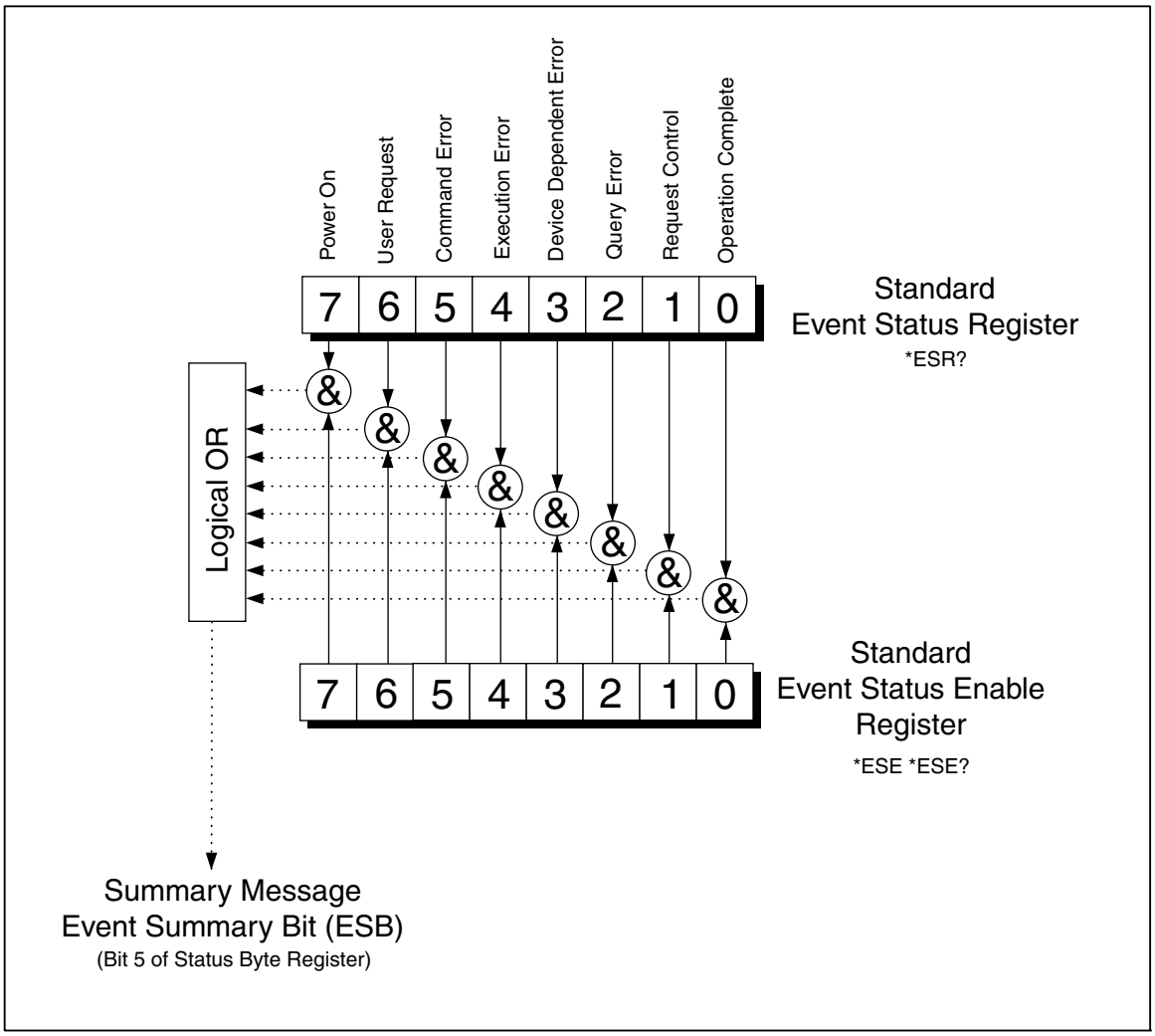

aam22f.eps

Figure 4-3. Event Status and Event Status Enable Registers

Table 4-6. Description of Bits in ESR and ESE

Bit No.	Name	Condition
0	Operation Complete (OPC)	All commands before receipt of an `*OPC` command have been executed. Interface is ready to accept another message.
1	Not used	Always set to 0.
2	Query Error (QYE)	Attempted to read data from the Meter's output buffer when no output was present or pending. Or received a new command line before a previous query was read. Or input and output buffers were full.
3	Device-Dependent Error (DDE)	Incorrect input during calibration. Or RS-232 input buffer overflow.
4	Execution Error (EXE)	Command was understood but could not be executed. This can result from a command that contained an inappropriate parameter.
5	Command Error (CME)	Command was not executed because it was not understood. This can result from a command that contained a syntax error.
6	Not used	Always set to 0.
7	Power On	Power was cycled off and on since the last time the ESR was read or cleared.

Status Byte Register

The STB is a binary-encoded register that contains eight bits. Note that the SRE uses bits 1 through 5 and 7 to set bit 6, the Master Summary Status (MSS) bit, as enabled by the SRE. The eight STB bits are described in Table 4-7, and are read using the `*STB?` command.

Table 4-7. Description of Bits in the Status Byte Register (STB)

Bit No.	Name	Condition
0	Not used	Always set to 0.
1	Not used	Always set to 0.
2	Not used	Always set to 0.
3	Not used	Always set to 0.
4	Message Available (MAV)	Data is available in output buffer. Bit set to 1 when response to query placed in output buffer. Bit cleared (set to 0) when output terminator sent to host.
5	Event Status (ESB)	One or more of enabled events in the Event Status Register have occurred. To determine which events have occurred, send command `*ERR?` to read the Event Status Register.

Table 4-7. Description of Bits in the Status Byte Register (STB) (cont.)

Bit No.	Name	Condition
6	Master Summary Status (MSS) [1]	Set to 1 if any enabled bit in the STB (MSS) register is set to 1; otherwise set to 0. To determine the status of MSS bit, send `STB?` query command. Request Service (RQS) is set to 1 if service requested from front panel or MSS is set to 1. Status of bit is returned by serial poll, which clears RQS.
7	Not used	Always set to 0.
[1] As read by `*STB?` Command. If the STB is read by a serial poll, bit 6 is returned as RQS.		

Reading the Status Byte Register

The host reads the STB by taking a serial poll or sending the Meter a `*STB?` query. (The value of the status byte is not affected by the `STB?` query.) When the STB is read, an integer is returned. This integer is the decimal equivalent of an 8-bit binary number. For example, 48 is the decimal equivalent of the binary 00110000, which means that bit 4 (MAV) and bit 5 (ESB) are set to 1.

If the status byte is read with an `*STB?` query, bit 6 is returned as Master Summary Status (MSS).

See the following example:

> `*STB?` reads the STB. If 32 is returned, it is converted to its binary equivalent of 00100000, which indicates that bit 5 (ESB) is set to 1. To determine the event status, you would read the ESB in the same manner, using the `*ESR?` command.

Computer Interface Command Set

The remainder of this chapter describes the RS-232 computer interface commands. Commands are grouped by related function and are listed in the tables that follow. Parameters that must be supplied by the user or strings returned by the Meter are enclosed in angle brackets (for example, <value>).

Common Commands

Table 4-8 describes common commands.

Table 4-8. Common Commands

Command	Name	Description
*CLS	Clear Status	Clears all event registers summarized in the status byte (except Message Available, which is cleared only if `*CLS` is the first message in the command line).
*ESE <value>	Event Status Enable	Sets Event Status Enable Register to <value>, where <value> is an integer between 0 and 255. <value> is an integer whose binary equivalent corresponds to the state (1 or 0) of bits in the register. If <value> is not between 0 and 255, an Execution Error is generated. EXAMPLE: Decimal 16 converts to binary 00010000, which sets bit 4 (EXE) in ESE to 1.
*ESE?	Event Status Enable Query	Meter returns the <value> of the Event Status Enable Register as set by the `*ESE` command. <value> is an integer whose binary equivalent corresponds to the state (1 or 0) of bits in the register.
*ESR?	Event Status Register Query	Meter returns the <value> of the Event Status Register and then clears it. <value> is an integer whose binary equivalent corresponds to the state (1 or 0) of bits in the register.
*IDN?	Identification Query	Meter returns the identification code of the Meter as four fields separated by commas. These fields are: Manufacturer (FLUKE); model (8808A); seven-digit serial number; and versions of main software and display software.
*OPC	Operation Complete Command	Meter sets the Operation Complete bit in the Standard Event Status Register when parsed.
*OPC?	Operation Complete Query	Meter places an ASCII 1 in the output queue when parsed.
*RST	Reset	Meter performs power-up reset.

Table 4-8. Common Commands (cont.)

Command	Name	Description
*SRE	Service Request Enable	Sets the Service Request Enable Register to <value>, where <value> is an integer between 0 and 255. The value of bit 6 is ignored because the Service Request Enable Register does not use it. <value> is an integer whose binary equivalent corresponds to the state (1 or 0) of bits in the register. If <value> is not between 0 and 255, an Execution Error is generated.
*SRE?	Service Request Enable Query	Meter returns the <value> of the Service Request Enable Register (with bit 6 set to 0). <value> is an integer whose binary equivalent corresponds to the state (1 or 0) of bits in the register.
*STB?	Read Status Byte	Meter returns the <value> of the Status Byte with bit 6 as the Master Summary bit. <value> is an integer whose binary equivalent corresponds to the state (1 or 0) of bits in the register.
*TRG	Trigger	Causes the Meter to trigger a measurement when parsed.
*TST	Self test query	Always returns zero.
*WAI	Wait-to-Continue	Do nothing.

Function Commands and Queries

Table 4-9 describes function commands and queries. Refer to Chapter 3 for detailed descriptions of each function.

Table 4-9. Function Commands and Queries

Commands		Function
Primary Display	Secondary Display	
AAC	AAC2	AC current
AACDC [1]	(Not applicable)	AC plus DC rms current
ADC	ADC2	DC current
(Not applicable)	CLR2	Clears measurement (if shown)
CONT	(Not applicable)	Continuity test
DIODE	(Not applicable)	Diode test
FREQ	FREQ2	Frequency

Table 4-9. Function Commands and Queries (cont.)

Commands		Function
Primary Display	**Secondary Display**	
FUNC1?	(Not applicable)	Meter returns function selected as command mnemonic. For example, if frequency is selected, `FUNC1?` returns FREQ.
(Not applicable)	FUNC2?	Meter returns function selected as command mnemonic. For example, if frequency is selected, `FUNC2?` returns FREQ If secondary display is not in use, an Execution Error is generated.
OHMS	OHMS2	Resistance
WIRE2, WIRE4	(Not applicable)	Only available in OHMS function. Used to switch between 2-wire and 4-wire measurement.
VAC	VAC2	AC volts
VACDC [1]	(Not applicable)	AC plus dc rms volts
VDC	VDC2	DC volts
[1] When AACDC or VACDC is selected, no function can be selected for the secondary display. An execution error is generated if attempted.		

Function Modifier Commands and Queries

Table 4-10 describes function modifier commands and queries. A function modifier causes the Meter to modify the normal operation of a measurement function or to perform an action on a measurement before displaying a reading. For example, the relative modifier (REL) causes the Meter to display the difference between a measured value and the relative base. The results of function modifier commands are shown in the primary display only.

Table 4-10. Function Modifier Commands and Queries

Command	Description
DB	Meter enters decibels modifier. Any reading shown in the primary display is in decibels. An Execution Error is generated if the Meter is not in a volts ac and/or dc function.
DBCLR	Meter exits the decibels modifier and displays readings in normal units. Also clears dB power, REL, and MIN MAX modifiers
DBPOWER	Meter enters dB Power modifier if the reference impedance is set to 2, 4, 8, or 16 ohms and a voltage function has been selected. Otherwise an Execution Error is generated. In dB Power, readings shown in the primary display are in Watts.
DBREF <value>	Set dB reference impedance to a <value> shown in Table 4-10A. This value corresponds to the reference impedance (ohms) indicated. If <value> is not a value in Table 4-10A, an Execution Error is generated.

Table 4-10A. Reference Impedance Values

Value	Ref Impedance	Value	Ref Impedance
1	2	12	150
2	4	13	250
3	8	14	300
4	16	15	500
5	50	16	600
6	75	17	800
7	93	18	900
8	110	19	1000
9	124	20	1200
10	125	21	8000
11	135		

DBREF?	Meter returns a <value> shown in Table 4-10A. This value corresponds to the reference impedance indicated.
HOLD	Meter enters Touch Hold function. (See “Touch Hold Function (HOLD)” in Chapter 3 for more information.) If HOLD is sent when the Meter is already in Touch Hold, a reading is forced and shown on the display.
HOLDCLR	Meter exits Touch Hold and restores display to normal operation.
HOLDTHRESH <threshold>	Sets HOLD measurement threshold to <threshold>. <threshold> must be 1, 2, 3, or 4 (0.01%, 0.1%, 1% or 10%, respectively). Any other value generates an Execution Error. See “Touch Hold Function (HOLD)” in Chapter 3 for more information.

Table 4-10. Function Modifier Commands and Queries (cont.)

Command	Description
HOLDTHRESH?	Meter returns Touch Hold <threshold> (1, 2, 3, or 4). See “Touch Hold Function (HOLD)” in Chapter 3 for more information.
MAX	Meter enters MAX modifier with present reading as maximum value. If already in MAX modifier, Meter displays maximum value. In MAX modifier, autoranging is disabled. See “Minimum / Maximum Modifier (MIN MAX)” in Chapter 3 for more information.
MAXSET <numeric value>	Meter enters MAX modifier with <numeric value> as the maximum value. <numeric value> can be a signed integer, signed real number without exponent, or signed real number with exponent. Autoranging is disabled. See “Minimum / Maximum Modifier (MIN MAX)” in Chapter 3 for more information. If <numeric value> exceeds the measurement range, an Execution Error is generated.
MIN	Meter enters MIN modifier with present reading as minimum value. If already in MIN modifier, Meter displays minimum value. In MIN modifier, autoranging is disabled. See “Minimum / Maximum Modifier (MIN MAX)” in Chapter 3 for more information.
MINSET <numeric value>	Meter enters MIN modifier with <numeric value> as the minimum value. <numeric value> can be a signed integer, signed real number without exponent, or signed real number with exponent. Autoranging is disabled. See “Minimum / Maximum Modifier (MIN MAX)” in Chapter 3 for more information. If <numeric value> exceeds the measurement range, an Execution Error is generated.
MNMX	Meter enters MIN MAX modifier with present reading as minimum and maximum value. If already in MIN MAX modifier, Meter displays latest MIN or MAX value. In MIN MAX modifier, autoranging is disabled. See “Minimum / Maximum Modifier (MIN MAX)” in Chapter 3 for more information. When the MIN MAX modifier is selected, you can toggle between displaying the minimum and maximum readings without losing the minimum and maximum values stored.
MNMXSET <numeric1, numeric2>	Meter enters MIN MAX modifier with <numeric1> as the maximum value and <numeric2> as the minimum value. <numeric1> and <numeric2> can be signed integer, signed real number without exponent, or signed real number with exponent. Autoranging is disabled. See “Minimum / Maximum Modifier (MIN MAX)” in Chapter 3 for more information. If <numeric1> or <numeric2> exceeds the measurement range, an Execution Error is generated.
MMCLR	Meter exits the MN MX modifier. The stored minimum and maximum values are lost, and the Meter returns to the ranging mode and range selected prior to selecting MN MX modifier.

Table 4-10. Function Modifier Commands and Queries (cont.)

Command	Description
MOD?	Meter returns a numeric value indicating modifiers in use, where 1 = MIN; 2 = MAX; 4 = HOLD; 8 = dB; 16 = dB Power; 32 = REL; and 64 = COMP. If multiple modifiers are selected, the value returned is equal to the sum of the values of the selected modifiers. For example, if dB and REL are selected, 40 is returned.
REL	Meter enters the relative readings modifier (REL) using the value shown on the primary display as the relative base. Autoranging is disabled. See "Relative Readings Modifier (REL)" in Chapter 3 for more information.
RELCLR	Meter exits REL modifier and returns to the ranging mode and range selected prior to selecting REL.
RELSET <relative base>	Meter enters REL modifier using <relative base> as the offset <relative base> value. <relative base> can be a signed integer, signed real number without exponent, or signed real number with exponent. Autoranging is disabled. If <relative base> exceeds the measurement range, an Execution Error is generated. See "Relative Readings Modifier (REL)" in Chapter 3 for more information.
RELSET?	Meter returns <relative base>. If the relative modifier has not been selected, an Execution Error is generated.

Range and Measurement Rate Commands and Queries

Table 4-11 describes range and measurement rate commands and queries. In autorange mode, the Meter automatically selects a range for each reading. In manual range mode, the user selects a fixed range.

Table 4-11. Range and Measurement Rate Commands and Queries

Command	Description
AUTO	Meter enters the autoranging mode on the primary display. If autorange mode cannot be selected (if REL, MIN MAX or diode/continuity test is selected), an Execution Error is generated.
AUTO?	Meter returns 1 if it is in autorange or 0 if not in autorange.
FIXED	Meter exits autoranging on the primary display and enters manual ranging. The present range becomes the selected range.

Table 4-11. Range and Measurement Rate Commands and Queries (cont.)

Command	Description
RANGE <value range>	Sets the primary display to <value range> where <value range> is the number in the Range Value column of Table 4-11A that corresponds with the applicable function ranges (voltage, ohms, current, etc.).

Table 4-11A. Ranges for Each Function

Range Value	Voltage Range	Ohms Range	AC Current	Freq. Range	DC Current
1	200 mV	200 Ω	20 mA	2 kHz	200 µA
2	2 V	2 kΩ	200 mA	20 kHz	2000 µA
3	20 V	20 kΩ	2 A	200 kHz	20 mA
4	200 V	200 kΩ	10 A	1000 kHz	200 mA
5	1000 V dc[1]	2 MΩ	NA	NA	2 A
6	NA	20 MΩ	NA	NA	10 A
7	NA	100 MΩ	NA	NA	NA

[1] 1000 V dc, 750 V ac

RANGE1?	Returns the range presently selected on the primary display.
RANGE2?	Returns the range presently selected on the secondary display. If the secondary display is inactive, an Execution Error is generated.
RATE <speed>	Sets the measurement rate to <speed> where <speed> is either S for slow (2.5 readings/second), M for medium (20 readings/second), or F for fast (100 readings/second). S, M, and F can be entered as uppercase or lowercase. Any other entry for <speed> generates an Execution Error.
RATE?	Returns <speed> as S for slow (2.5 readings/second), M for medium (20 readings/second), or F for fast (100 readings/second).

Measurement Queries

Table 4-12 describes measurement queries, which are shown on the primary and/or secondary displays.

Table 4-12. Measurement Queries

Command	Description
MEAS1?	Meter returns the value shown on the primary display after the next triggered measurement is completed.
MEAS2?	Meter returns the value shown on the secondary display after the next triggered measurement is completed. If the secondary display is off, an Execution Error is generated.
MEAS?	If both displays are on, Meter returns the value shown on both displays after the next triggered measurement is completed in the format selected. (See FORMAT command in Table 4-15.) Refer to the following examples for each format: Example of Format 1: +1.2345E+0,+6.7890E+3<CR><LF> Example of Format 2: +1.2345E+0 VDC, +6.7890E+3 ADC<CR><LF> If the secondary display is not on, MEAS? is equivalent to MEAS1? Note: If MEAS is used in external trigger (TRIGGER 2 through TRIGGER 5), unexpected results will be obtained.
VAL1?	Meter returns the value shown on the primary display. If the primary display is blank, the next triggered measurement is returned.
VAL2?	Meter returns the value shown on the secondary display. If the secondary display is blank, the next triggered measurement is returned. If the secondary display is off, an Execution Error is generated.
VAL?	If both displays are on, Meter returns the value shown on both displays in the format selected. (See FORMAT command in Table 4-15.) Refer to the following examples for each format: Example of Format 1: +1.2345E+0,+6.7890E+3<CR><LF> Example of Format 2: +1.2345E+0 VDC, +6.7890E+3 ADC<CR><LF> If the secondary display is not on, VAL is equivalent to VAL1. If a display is blank, the next triggered measurement on that display (or displays) is returned.

Compare Commands and Queries

Table 4-13 describes the compare commands and queries. These commands cause the Meter to determine whether a measurement is higher than, lower than, or within a specified range. These commands correspond with COMP, ▲ and ▼ on the front panel.

Table 4-13. Compare Commands and Queries

Command	Description
COMP	Meter enters compare (COMP) function. Touch Hold is automatically turned on. (Touch Hold can be turned off with HOLDCLR command.)
COMP?	Meter returns HI if the last COMP measurement reading was above the upper limit of the compare range; LO if it was below the lower limit of the compare range; PASS if within compare range; or a dash (—) if a measurement has not completed.
COMPCLR	Meter exits compare function (and Touch Hold if it is selected) and restores display to normal operation.
COMPHI <high value>	Sets HI compare (COMP) value to <high value>. <high value> can be a signed integer, signed real number without exponent, or signed real number with exponent.
COMPLO <low value>	Sets LO compare (COMP) value to <low value>. <low value> can be a signed integer, signed real number without exponent, or signed real number with exponent.
HOLDCLR	Meter exits Touch Hold and restores display to normal operation, but does not exit the compare function.

Trigger Configuration Commands

Table 4-14 describes the trigger configuration commands, which set and return the trigger configuration.

Table 4-14. Trigger Configuration Commands

Command	Description
TRIGGER <type>	Sets the trigger configuration to <type> where <type> is the number in the Type column of Table 4-3 that corresponds with the applicable trigger, rear trigger and setting delay. If the <type> entered is not between 1 and 5, an Execution Error is generated. Select a trigger type with settling delay enabled (trigger type 3 or 5) when the input signal is not stable before a measurement is triggered. Typical settling delays are provided in Table 4-3.
TRIGGER?	Returns the trigger type set by the TRIGGER command.

Miscellaneous Commands and Queries

Table 4-15 describes miscellaneous commands and queries.

Table 4-15. Miscellaneous Commands and Queries

Command	Description
^C (CONTRL C)	Causes =><CR><LF> to be output.
FORMAT <format>	Set output <format> to 1 or 2. Format 1 outputs measurement values without measurement units (VDC, ADC, OHMS, etc.). Format 2 allows measurement units to be output with measurement units. (See Table 4-16.) Format 2 primarily is used with RS-232 print-only mode.
FORMAT?	Returns the format in use (1 or 2).
PRINT <rate>	Sets print rate for print mode. See Table 4-2.
SERIAL?	Returns Meter's serial number.

Table 4-16. Measurement Units Output with Format 2

Measurement Function	Units Output
Volts dc	VDC
Volts ac	VAC
Amps dc	ADC
Amps ac	AAC
Resistance	OHMS
Frequency	HZ
DIODE	VDC
Continuity Test	OHMS

RS-232 Remote / Local Configurations

Table 4-17 describes the RS-232 remote and local configuration commands, which are used with the RS-232 interface to set up the remote/local configuration of the Meter. These commands are valid only when the RS-232 interface is enabled.

Table 4-17. Remote/Local Configuration Commands

Command	Description
REMS	Puts the Meter into remote (REMS) state mode without front panel lockout. Remote is shown on the display.
RWLS	Puts the Meter in remote with lockout state (RWLS) with front panel lockout. Remote and 🔑 are shown on the display. When in RWLS, all front panel buttons are disabled.
LOCS	Puts the Meter is local state (LOCS) mode without lockout. All front panel buttons are enabled.
LWLS	Puts the Meter in local with lockout state (LWLS) mode. All front panel buttons are disabled. 🔑 is shown on the display.

RS-232 Save / Recall System Configurations

Table 4-18 describes RS-232 save/recall system configuration commands, which are used with the RS-232 interface to set up the remote/local configuration of the Meter.

Table 4-18. Save / Call System Configuration Commands

Command	Description
Save <position>	Saves the current running working status into <position>, where <position> is 1 through 6.
Call <position>	Recalls the working status from <position>, where <position> is 1 through 6.

Sample Program Using the RS-232 Computer Interface

Figure 4-4 is an annotated BASIC A program written for a PC that demonstrates how the Meter can be used with the RS-232 computer interface.

```
10 ' EXAMPLE.BAS  Fluke 45 program to record magnitude and frequency data
11 '              - initialize RS-232 communication and set up Fluke 45
12 '              - check command acceptance by Fluke 45
13 '              - display and record measurement data in 'TESTDATA.PRN'
100 CLS : KEY OFF
110 RESULT$ = ""        ' Define data input
120 PROMPT$ = ""        ' Define string to hold command completion prompt
130 CMD$    = ""        ' Define string to hold command to Fluke 45
140 IN$     = ""        ' Define input string
150 ESC$    = CHR$(27)  ' Define program termination command string
160 COUNT   = 0         ' Initialize number of readings
200 '
201 ' Open communications port 9600 Baud, no parity, 8 bit data,
202 '    ignore Clear to Send, Data Set Ready, Carrier Detect
210 OPEN "com1:9600,n,8,,cs,ds,cd" AS #1
220 IF ERRORCODE <> 0 THEN PRINT "ERROR - Could not open com1:" : END
221 '
230 OPEN "testdata.prn" FOR OUTPUT AS #2        ' Open data file
231 '
232 ' Set up Fluke 45:
233 '   "rems"      Put the Fluke 45 into Remote mode
234 '   "vac"       Primary measurement is Volts AC
235 '   "dB"        Add decibels modifier to primary measurement
236 '   "freq2"     Secondary display measurement to be frequency
237 '   "format 1"  Data to be formatted without units
240 CMD$ =  "rems; vac; db; freq2; format 1"
250 GOSUB 1000          ' Send command and get response
300 '
310 LOCATE 1 , 1  : PRINT "Program to record Magnitude and Frequency data."
320 LOCATE 12, 15 : PRINT "Magnitude/Frequency: ";
330 LOCATE 25, 10 : PRINT "Press any key to record       Press ESC key to exit";
331 '
340 WHILE IN$ <> ESC$
350     PRINT #1, "meas?"                   ' Request next measurement results
360     ECHO$ = INPUT$(LEN("meas?")+2, #1)  ' Discard echoed command string
370     LINE INPUT #1, RESULT$              ' Get the measurements
380     PROMPT$ = INPUT$(5, #1)             ' Get the prompt + trailing <LF>
390     LOCATE 12, 36 : PRINT RESULT$;      ' Print the measurement result
400     IN$ = INKEY$                        ' Read the keyboard buffer
401 '   If a key has been pressed, record the data
410     IF IN$ = "" OR IN$ = ESC$ THEN GOTO 450
420         PRINT #2, RESULT$               ' Store data in Lotus ".PRN" format
430         COUNT = COUNT + 1               ' Increment number of readings
440         LOCATE 13, 32 : PRINT COUNT; " Readings recorded";
441 '   ENDIF
450 WEND
460 LOCATE 14, 1  : PRINT "Test Complete - Data stored in 'TESTDATA.PRN'";
470 CLOSE 1, 2
480 KEY ON
490 END
1000 '
1001 ' Subroutine: Command_check
1002 ' Reads and discards echoed commands and checks for error response prompt
1003 ' The possible command responses are:
1004 '      "=><CR><LF>" (command successful)
1005 '      "?><CR><LF>" (command syntax error)
1006 '      "!><CR><LF>" (command execution error)
1007 '
1010 PRINT #1, CMD$
1020 ECHO$ = INPUT$(LEN(CMD$)+2, #1)     ' Discard echoed command string
1030 PROMPT$ = INPUT$(4, #1)             ' Get prompt
1040 IF INSTR(1, PROMPT$, "=>") <> 0 THEN RETURN    ' Command successful
1050 IF INSTR(1, PROMPT$, "?>") <> 0 THEN PRINT "Command syntax!!"
1060 IF INSTR(1, PROMPT$, "!>") <> 0 THEN PRINT "Command failure!!"
1070 PRINT "Program execution Halted"
1080 END
```

aam23f.eps

Figure 4-4. Sample Program for RS-232 Computer Interface

Appendices

Appendix	Title	Page
A	Applications	A-1
B	2X4 Test Leads	B-1

Appendix A
Applications

Introduction

This chapter discusses some applications that will help you use the Meter effectively. These applications assume you are familiar with the basic operation of the Meter and have a basic understanding of electronics. A sophisticated understanding of electrical circuits is not necessary.

Using the Dual Display

Using the dual display effectively and with ingenuity can greatly enhance your test and measurement capabilities. The dual display allows you to make two measurements on a common input signal, which in the past would have required that you use two meters or to make a series of measurements.

To see how easy it is to use the dual display to take two readings on one signal, perform the following example procedure to measure the voltage and frequency of line power.

1. Press on the Meter.
2. Plug the test leads into the **INPUT VΩ→+))))** **HI** and **LO** terminals.
3. Press AC V to select volts ac for the primary display.
4. Press SHIFT then FREQ to select frequency for the secondary display.
5. Insert the test lead probes into a wall socket. The display will appear similar to FigureA-1. The actual display depends on the local power supply.

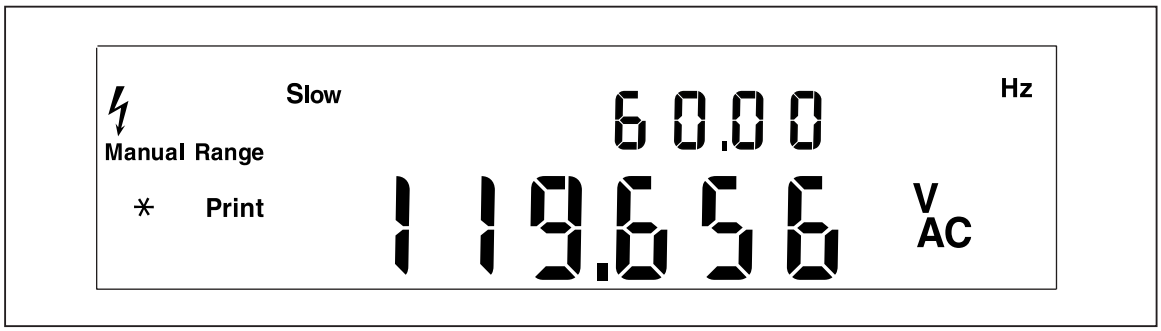

eue25.eps

Figure A-1. Example of Dual Display Showing Volts AC and Frequency

Using Measurement Functions in Combination

The dual display allows you to display select combinations of measurements for the input signal being measured. Allowable combinations of properties are shown in Table A-1.

Volts (dc + ac) rms or current (dc + ac) rms measurements can only be made in the primary display. While (dc + ac) measurements are being made, another function cannot be selected for the secondary display.

Additional combinations of dual readings can be added by using the relative readings, minimum/maximum, and/or Touch Hold function modifiers.

Table A-1. Allowable Combinations of Measurements

		Primary Function					
		DC V	AC V	DC I[1]	AC I	FREQ	OHMS
Secondary Function	DC V	X	X	X	X		
	AC V	X	X	X	X	X	
	DC I	X	X	X	X		
	AC I	X	X	X	X		
	FREQ		X			X	
	OHMS						X

How the Meter Takes Dual Display Measurements

When the Meter is in the dual display mode (both the primary and secondary displays are on), the Meter takes measurements and updates the displays in one of two ways: (1) It takes a single measurement and updates both displays using that measurement; or (2) it updates each display using a separate measurement.

Updating Primary and Secondary Displays with a Single Measurement

The Meter takes a measurement and updates both displays using that measurement only when the measurement function is the same for both the primary and secondary displays.

This will happen, for instance, if Touch Hold (with autoranging on) is applied to a measurement function on the primary display and the same function is selected for the secondary display.

If the relative readings value of a dc voltage measurement is shown in the primary display and the dc voltage itself is shown in the secondary display, the Meter takes a single measurement and updates both displays with it.

Updating Primary and Secondary Displays with Separate Measurements

If the measurement function in the primary display is different from that in the secondary display, the Meter updates each display using a separate measurement.

Taking Voltage and Current Measurements Using the Dual Display

Most applications of the dual display listed in Table A-2 can be performed using a single set of test leads connected to the **INPUT VΩ→+•))) HI** and **LO** terminals. However, to measure the voltage and current of an input signal requires three leads. Be sure that the voltage and current measurements share the same common as shown in Figure A-2. Then simply follow the precautions you would follow if you were making normal current measurements without a current clamp.

Table A-2. Sample Dual Display Applications

Primary Display	Secondary Display	Applications
Volts DC	Volts AC	• Monitor dc level and ac ripple of power supply Troubleshoot amplifier circuits
Volts DC	Current DC	• Check power supply load regulation • Monitor UUT current draw and circuit voltages • Monitor loop current and voltage drop across transmitter
Volts DC	Current AC	• Line and load regulation tests • dc/ac or ac/dc converters
Volts AC	Current DC	• Line and load regulation tests • dc/ac or ac/dc converters
Volts AC	Current AC	• Line and load regulation tests • Transformer (magnetic circuit) saturation
Volts AC	Frequency	• Measure ac amplitude and frequency for line voltage and ac signal analysis • Measure frequency response of an amplifier • Adjust ac motor control • Read noise in telecommunication applications • Adjust portable power generator to optimize power output • Set frequency compensation for a network
Current DC	Current AC	• Measure ripple and dc current draw of switching power supply • Measure current dissipation in protective fuse resistors used in power supplies • Measure ripple and noise on a line
MN MX	Actual Value	• Show the minimum or maximum value recorded and the present measurement
REL	Actual Value	• Show actual measurement and the difference between this value and the relative base.

Table A-2. Sample Dual Display Applications (cont.)

Primary Display	Secondary Display	Applications
REL	Resistance	• Select and sort resistors. (See also "Using the Compare Function" in Chapter 3.)
HOLD	Actual Value	• Show actual measurement while holding a previous, stable measurement on the primary display

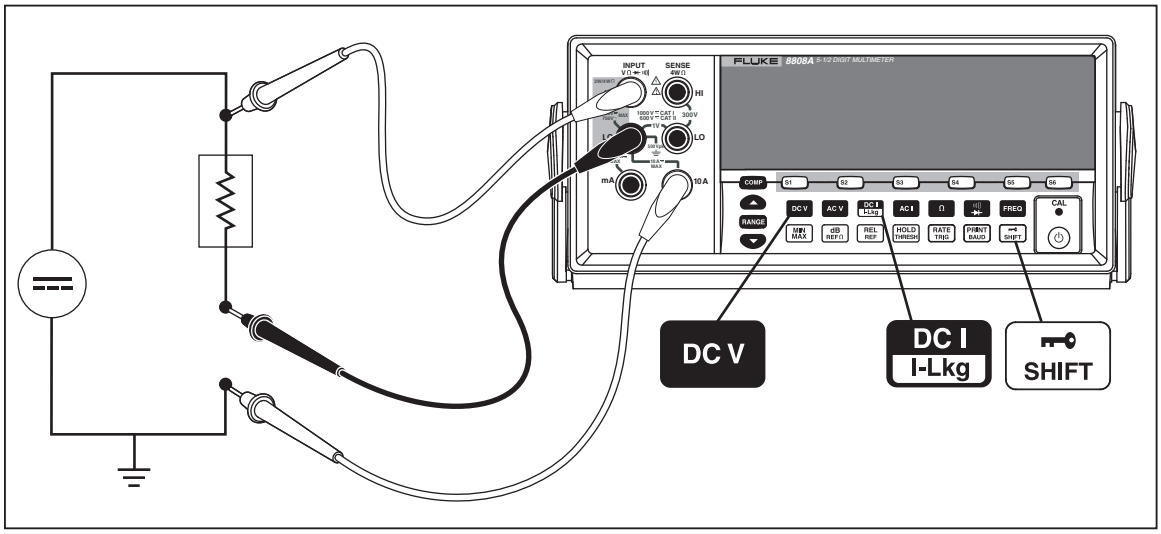

eue27.eps

Figure A-2. DC Voltage and DC Current Measurement on Input Signal

The lead from the internal measuring circuitry of the meter to the LO terminal (on the front panel) is the same for both voltage and current measurements. The resistance of this lead is approximately .003 ohm. If current is being measured, therefore, a voltage drop will occur in the resistance that is common to both circuits. This internal resistance, when added to the external resistance of the lead from the COM input terminal will affect the accuracy of the voltage reading. For instance, if the external lead resistance is .007 ohm, the "total" common resistance is .010 ohm. If there is 1 A of current, the voltage reading would be affected by

(1 A x.01ohm) = .01 V or 10 m V.

Depending on the circumstances, this may be significant.

If you want to measure dc voltage on an input signal in the primary display and dc current in the secondary display, proceed as follows:

1. Turn the Meter on
2. Press DC V to select the dc voltage function for the primary display.
3. Press SHIFT then DC I I-Lkg to select the dc current function for the secondary display.
4. Connect the leads to the test circuit as shown in Figure A-2 and read the measurements on the display. Although current will be displayed as negative, it is in fact positive when interpreted according to current flow convention.

Repsonse Times

Response time is the time between a change in an input and when that change is displayed. The meter's response time depends on many factors: the measurement function selected, number of measurements being made (single measurement when only the primary display is used, or two measurements when both the primary and secondary display are used), the input level, range type (autorange or manual range), the measurement rate (slow, medium, or fast), and whether measurement types are mixed or not. (Measurements are either ac-type [ac volts or amps] or dc-type [all others]).

Typical response times for a single measurement are shown in Table A-3. For a single measurement, results are displayed as soon as the correct range is found. However, additional time needs to be allowed for the measurement to be fully settled in order for the displayed result to meet the meter's accuracy specifications. This "settling delay" varies, depending on the differences between the primary and secondary displays.

The settling delay is longer when ac- and dc-type measurements are mixed. Examples of mixed ac and dc measurements are volts dc and amps ac, and volts ac and amps dc. Settling times are listed in Table A-4.

Update Rate in the Dual Display Mode

The update rate is the time between successive measurements for a *steady state signal.*In the dual display mode (when both the primary and secondary displays are on), if the measurement functions or the ranges selected for the primary and secondary displays are different, the update rate for each measurement function will vary from the update rate for that measurement function when only the primary display is on.

When the secondary display is on, the meter always waits for the measurement to be fully settled after changing the range or function before displaying a reading. The amount of delay depends on the functions and ranges selected for the primary and secondary displays as shown in Table A-4.

Table A-5 lists the interval between measurements when the measurement function or range of the primary and secondary display differ. These intervals vary by measurement function, range, measurement rate (slow, medium, or fast), and measurement type (ac-and dc-type measurements mixed or not mixed).

Table A-3. Typical Single Measurement Response Times (in Seconds)

	Slow Rate		Medium Rate		Fast Rate	
Meas. Function	**Auto Range[1]**	**Single Range[2]**	**Auto Range[1]**	**Single Range[2]**	**Auto Range[1]**	**Single Range[2]**
DC V	1.2	0.4	0.7	0.1	0.5	0.05
AC V	1.2	0.2	0.7	0.1	0.5	0.05
DC I I-Lkg	1.4	0.4	0.8	0.1	0.6	0.05
AC I	1.0	0.2	0.6	0.1	0.5	0.05
Ω	1.6	0.4	0.9	0.1	0.8	0.05
)))))	N/A	N/A	N/A	N/A	N/A	N/A
FREQ	1.0	0.2	0.6	0.2	0.4	0.15

[1] Time to autorange a new measurement from the lowest to the highest range and to display the result.
[2] Typical time to change to the next higher or lower range and display the result.

Table A-4. Typical Settling Delays (in Seconds)

Meas. Function	Range	Settling Delay		
		Slow	**Med**	**Fast**
DC V	All	0.2	0.05	0.05
AC V	All	0.5	0.05	0.05
DC I I-Lkg	All	0.2	0.3	0.0
AC I	All	0.5	0.2	0.2
Ω	All	0.2	0.5	0.5
)))))	N/A	N/A	N/A	0.05
FREQ	N/A	0.5	0.2	0.2

Table A-5. Typical Measurement Intervals (in Seconds) for Dual Display Measurements

Meas. Function	Range	Slow	Med	Fast
DC V	All	1.2	1.0	0.9
AC V	All	1.0	0.85	0.8
DC I I-Lkg	All	1.2	1.0	0.9
AC I	All	1.0	0.85	0.8
Ω	N/A	N/A	N/A	N/A
)))))	N/A	N/A	N/A	N/A
FREQ	N/A	N/A	N/A	N/A

External Trigger

The external trigger can be used with or without settling delays, as shown in Table A-4. (Refer to Table 4-3 for trigger types.) The amount of trigger delay varies depending on differences between the primary and secondary displays, as described in the previous section.

When external trigger is enabled, the meter determines the ranges for the primary and secondary (if enabled) displays based on the input at that time. The meter is then ready to begin measuring the input on the optimum range as soon as the trigger is received. If the input changes so that either display autoranges after the trigger is received, the autoranging response times (as shown in Table A-3) may be required before each measurement result is displayed.

The rear panel trigger input is edge sensitive. A low to high pulse (above +3 V) will be recognized as a trigger less than 3 ms.

Thermal Voltages

Thermal voltages are the thermovoltaic potentials generated at the junction between dissimilar metals. Thermal voltages typically occur at binding posts and can be greater than 1 µV. When making low-level dc measurements, thermal voltages can present an additional source of error.

Thermal voltages can also cause problems in the low ohms ranges. Some low-value resistors are constructed with dissimilar metals. Just handling such resistors can cause thermal voltages large enough to introduce measurement errors.

Use the following techniques to reduce the effect of thermal voltages:

1. Use similar metals for connections wherever possible (e.g., copper-to-copper, gold-to-gold, etc.).
2. Use tight connections.
3. Use clean connection (especially free of grease and dirt).
4. Use caution when handling the circuit under test.
5. Wait for the circuit to reach thermal equilibrium. (Thermal voltages are generated only where there is a temperature gradient.)

Making Low-Level Current Measurements

There are many applications where obtaining the utmost accuracy in low-level current measurements is critical. For example, determining the leakage current of a battery operated device in its standby mode is critical in determining the time before battery recharge is needed. Traditional multimeters make these measurements using a shunt method shown in Figure A-3. The shunt resistor converts the current to be measured to a voltage, which is called the burden voltage. Since the internal impedance of the current source is in parallel with the shunt resistor, the current flowing in the shunt resistor is less than the actual value, thus causing an error.

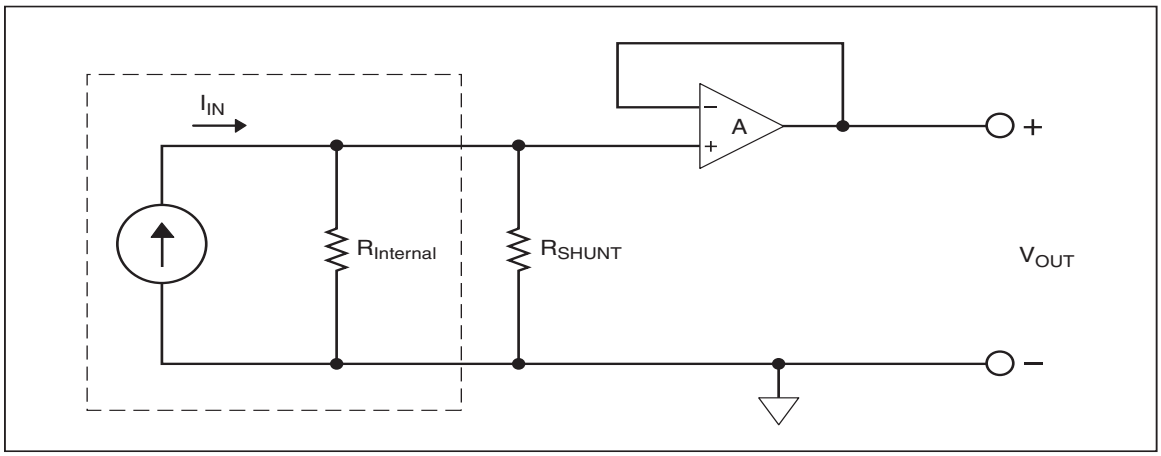

eue28.eps

Figure A-3. Shunt Method of Low-Level Current Measurement

Another method of low-current measurement is the feedback resistor method shown in Figure A-4. The feedback resistor converts the current to be measured into a voltage. The high gain operational amplifier forces the burden voltage to be rather low and thus induces an error. The zero burden voltage measurement method used in the Meter gives a more accurate measurement of low-level (leakage) currents.

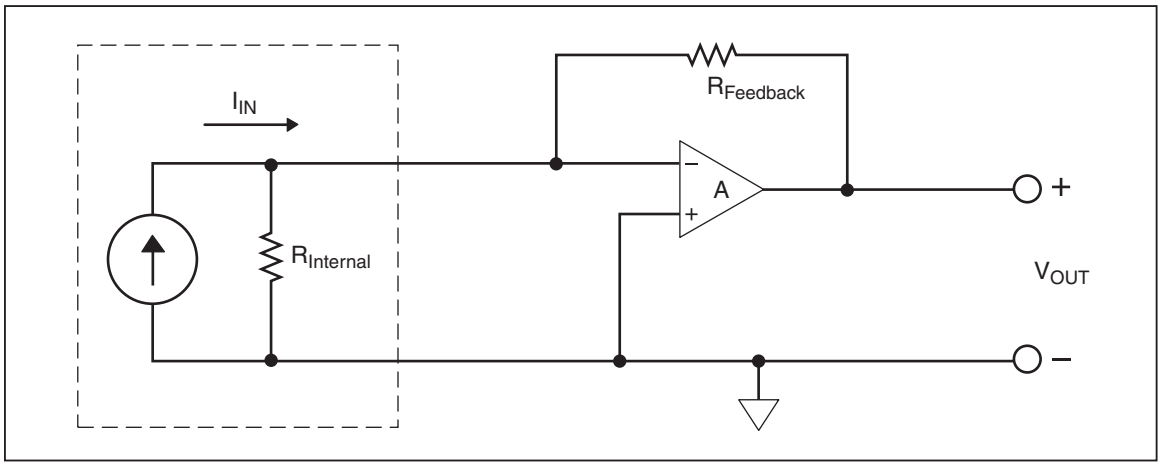

eue29.eps

Figure A-4. Zero Burden Voltage Low-Level Current Measurement

Appendix B
2X4 Test Leads

Introduction

The optional Fluke TL2X4W test leads simplify making 4-wire ohms measurements by integrating the Hi-Hi Sense and Lo-Lo Sense test leads into one cable. The Meter's **Input HI** and **LO** jacks consist of two contacts. One contact is connected to HI or LO input circuits and the other contact is connected to the Sense input circuits. Like the input jacks, the 2x4 test lead also has two contacts that align with the input jack contacts to provide a four wire connection.

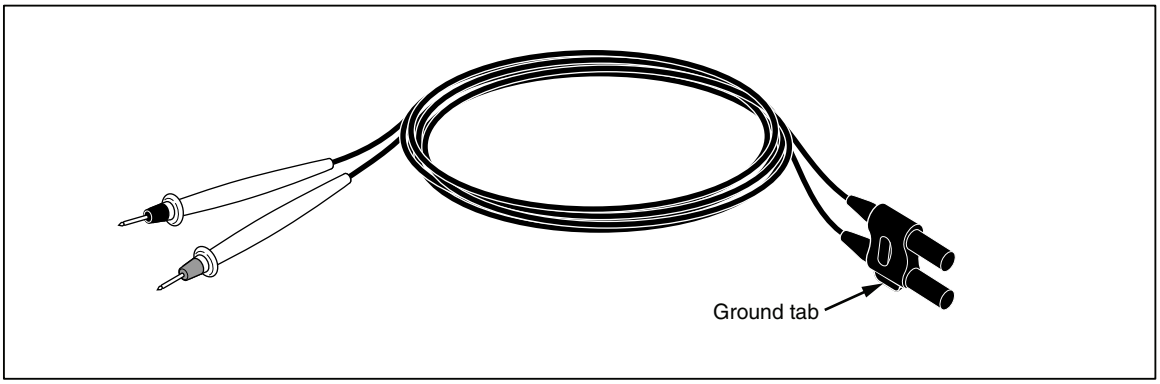

caw061.eps

Figure B-1. 2X4 Wire Test Leads

⚠⚠ Warning

To avoid electric shock and possible damage to the Meter, use the 2X4 Wire test leads as specified in this manual. Inspect the test leads before use. Do not use them if insulation is damaged or metal is exposed. Check the test leads for continuity. Replace damaged test leads before using the Meter.

Manual Supplement

Manual Title:	8808A Users	Supplement Issue:	**3**
Print Date:	July 2007	Issue Date:	8/08
Revision/Date:		Page Count:	2

This supplement contains information necessary to ensure the accuracy of the above manual. This manual is distributed as an electronic manual on the following CD-ROM:

CD Title:	8808A
CD Rev. & Date:	1, 1/2008
CD PN:	2713002

© 2007-2008 Fluke Corporation. All rights reserved.

FLUKE®

Change #1, 44931, 47892

On page 1-8, under Relative Humidity (non-condensing), replace Operating with the following:

Operating.....<90 % (0 °C to 28 °C)
<75 % (28 °C to 40 °C)
<45 % (40 °C to 50 °C)

Change #2, 46479

On page 1-6, Table 1-2, change the description for ⏻,

From: Standby power ON/OFF

To: Display ON/OFF and Meter reset

On page 1-11, under DC Current, Shunt Resistance, replace the Burden Voltage with the following:

Burden voltage <5 mV for 200 µA and 2 mA range.

Under **Input Characteristics**, change the **Burden Voltage** for both 200 µA and 2 mA ranges,

From: <1 mV

To: <5 mV

On page 2-5, under the Warning, replace the second sentence in step 4 with the following:

If the fuse is good, the Meter displays a reading of <10 Ω.

On page 3-9, under Selecting a Measurement Rate, change the order of the last two sentences in the last paragraph as follows:

Pressing [RATE TRIG] does not affect the frequency update rate. The measurement rate is always fast for Diode and Continuity test.

On page 3-11 under Frequency Ranging, in the third paragraph, delete the second sentence:

If the frequency is lower than 20 Hz, UL is displayed.

On page 3-20, change the following and delete Level 4:

From:

- Level 1 (0.01 % of reading)
- Level 2 (0.1 % of reading)
- Level 3 (1 % of reading)
- Level 4 (10 % of reading)

To:

- Level 1 (5 % of range)
- Level 2 (7 % of range)
- Level 3 (8 % of range)

On page 3-25, Table 3-9, replace the 4th row with the following:

Touch Hold Sensitivity level	1 (5 % of reading)

Change#3

On page 2-5, under the Warning, replace the second sentence in step 5 with the following:

If the fuse is good, the Meter displays a reading of <2 Ω.

On page 3-23, Table 3-7, in Touch Hold minimum response level row, replace the Options, with the following:

- Level 1 (5 % of range)
- Level 2 (7 % of range)
- Level 3 (8 % of range)

On page A-6, Table A-3, replace the Ω and the FREQ rows with the following:

	Slow Rate		Medium Rate		Fast Rate	
Meas. Function	**Auto Range**	**Single Range**	**Auto Range**	**Single Range**	**Auto Range**	**Single Range**
Ω	3.2	0.4	1.8	0.2	1.1	0.10
FREQ	1.2	0.4	0.72	0.18	0.56	0.14

On page A-8, replace the third sentence in the second paragraph with the following:

The high gain operational amplifier forces the burden voltage to be approximately zero and thus reduces the error associated with the simple shunt measurement approach.