嘉尼企業股份有限公司CANAL ELECTRONIC CO.,LTD.

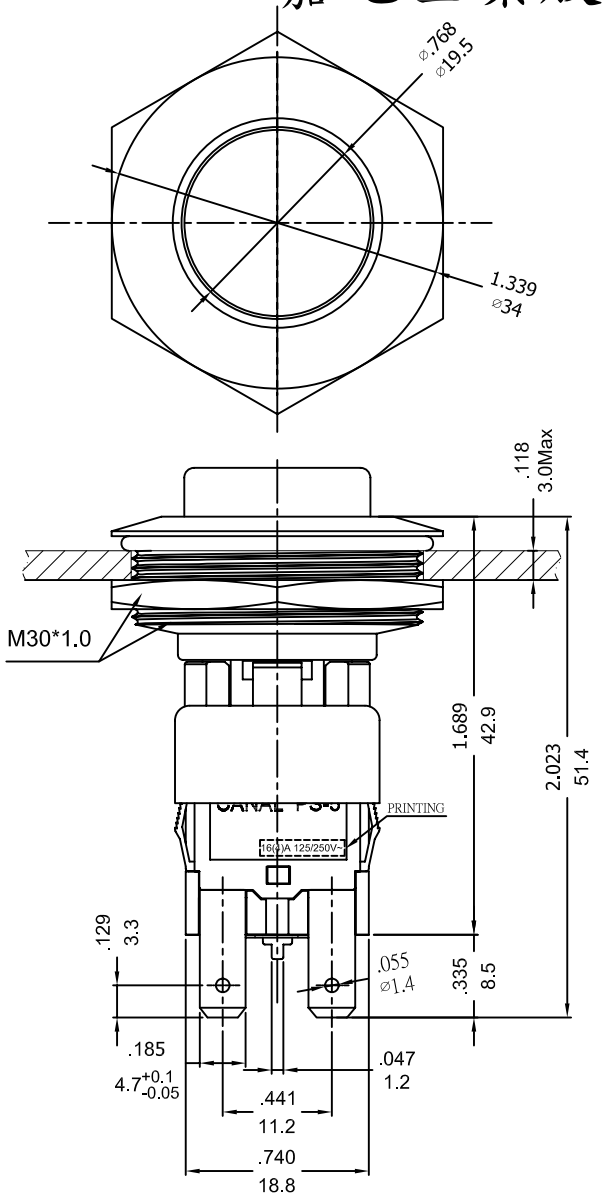

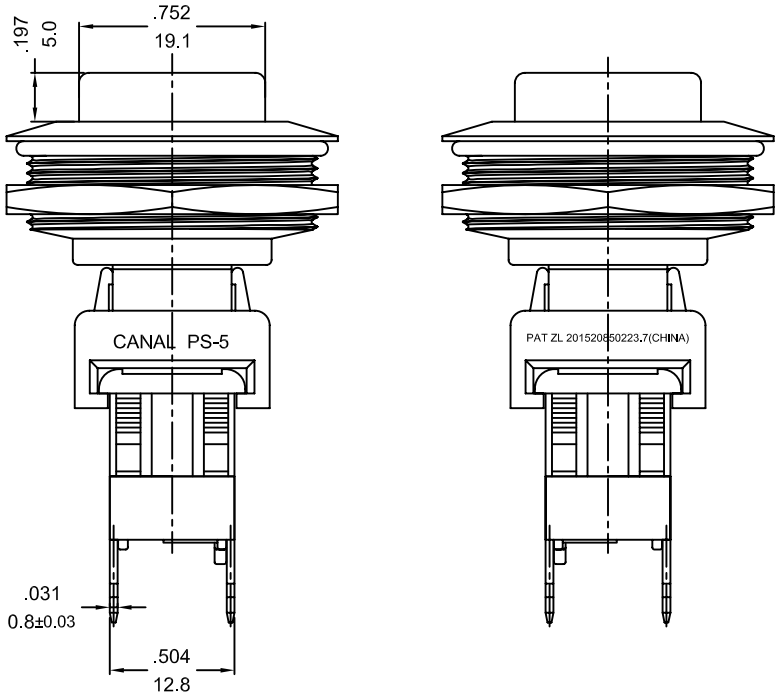

SWITCHING CIRCUIT

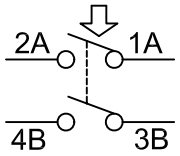

SPECIFICATION MODEL :"PS5" SERIES

RATING:16(4)A 125/250V~T-125/55(cURus/ENEC15)
16(4)A 250V~ T125/55(CQC)
WITHSTAND VOLTAGE:1500VAC 1 MINUTE
CONTACT RESISTANCE:20mΩ INITIAL (MAX),
PROTECTION TYPE:IP65(PANEL WATERPROOF)
MECHANICAL COLLISION PROTECTION TYPE:IK07
INSULATION RESISTANCE:500VDC - 100MΩ (MIN).

嘉尼工程
2018.9.10
文件管制章

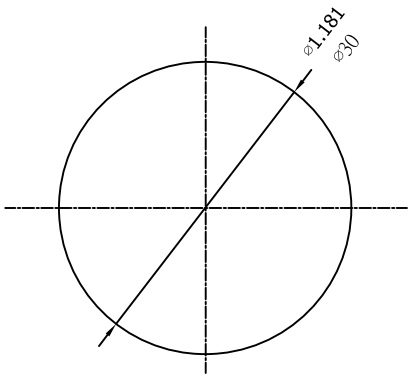

PANEL MOUNTING

NOTE:TOLERANCES UNLESS OTHERWISE SPECIFIED:± .012/0.3 (in/mm)

REVISION	DESCRIPTION	REVISED BY	TOLERANCES				ANGLE ½°	UNIT	mm	PART NAME	PS5 SPEC DRAWING	DWG NO
4			DRAWN BY	達志各	DESIGNED BY	蔡劍	SCALE	5/4				S7565A
3												
2			CHECKED BY		APPROVED BY		DATE	2018.09.06		PART NO	PS5-210SN-BSA-0MAC	
1 2018.09.06	首次出圖	達志各										