# 嘉尼企業股份有限公司 CANAL ELECTRONIC CO.,LTD.

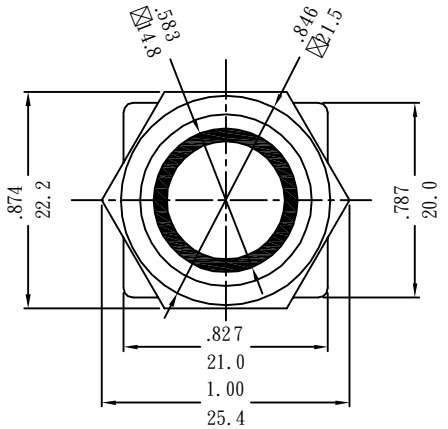


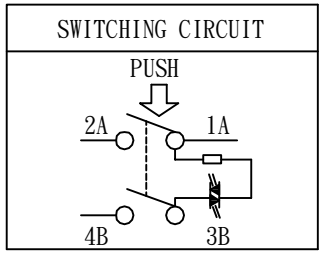


SPECIFICATION MODEL :"PS-5" SERIES

RATING:16A 125/250VAC (UL/CUL)
16(4)A 250V~ T125/55(VDE/ENEC,CQC)
WITHSTAND VOLTAGE:1,000VAC 1 MINUTE
CONTACT RESISTANCE:20mΩ INITIAL (MAX),
INSULATION RESISTANCE:500VDC - 100MΩ (MIN).
ILLUMINATED:LED 3VDC(Don't have to distinguish between the anode and cathode polarity

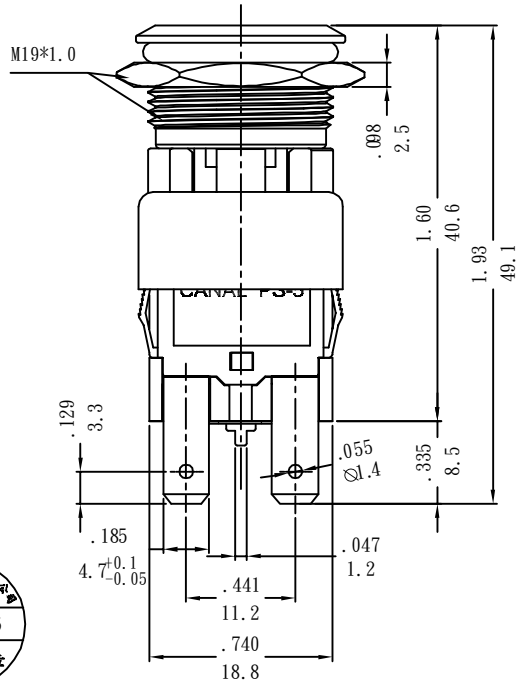


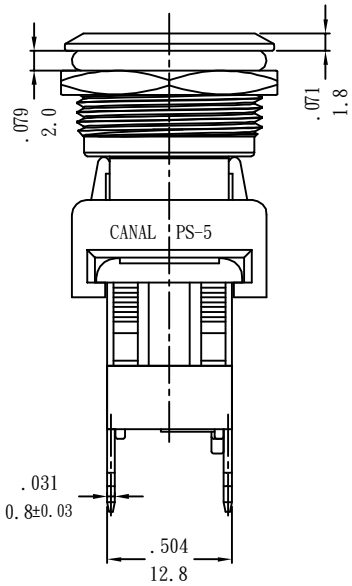


CUT-OUT

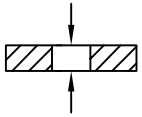

0.75mm MIN.
4.0mm MAX.

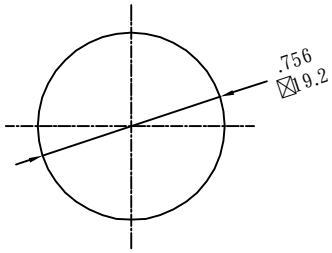


PANEL MOUNTING

嘉尼企業股份有限公司 工程部 2015.09.25 文件管制章

NOTE:TOLERANCES UNLESS OTHERWISE SPECIFIED: ± .012/0.3 (in/mm)

| REVISION | DESCRIPTION | REVISED BY | TOLERANCES | | | | ANGLE ½° | UNIT | mm | PART NAME | PS-5 SPEC DRAWING | DWG NO |
|---|---|---|---|---|---|---|---|---|---|---|---|---|
| 4 | | | DRAWN BY | 達志各 | DESIGNED BY | 蔡劍 | SCALE | 5/4 | | | | 參考圖 |
| 3 | | | | | | | | | | | | |
| 2 | | | CHECKED BY | | APPROVED BY | | DATE | 2015.09.25 | | PART NO | PS5-210MH-BUD-0RAC | |
| 1 | | | | | | | | | | | | |