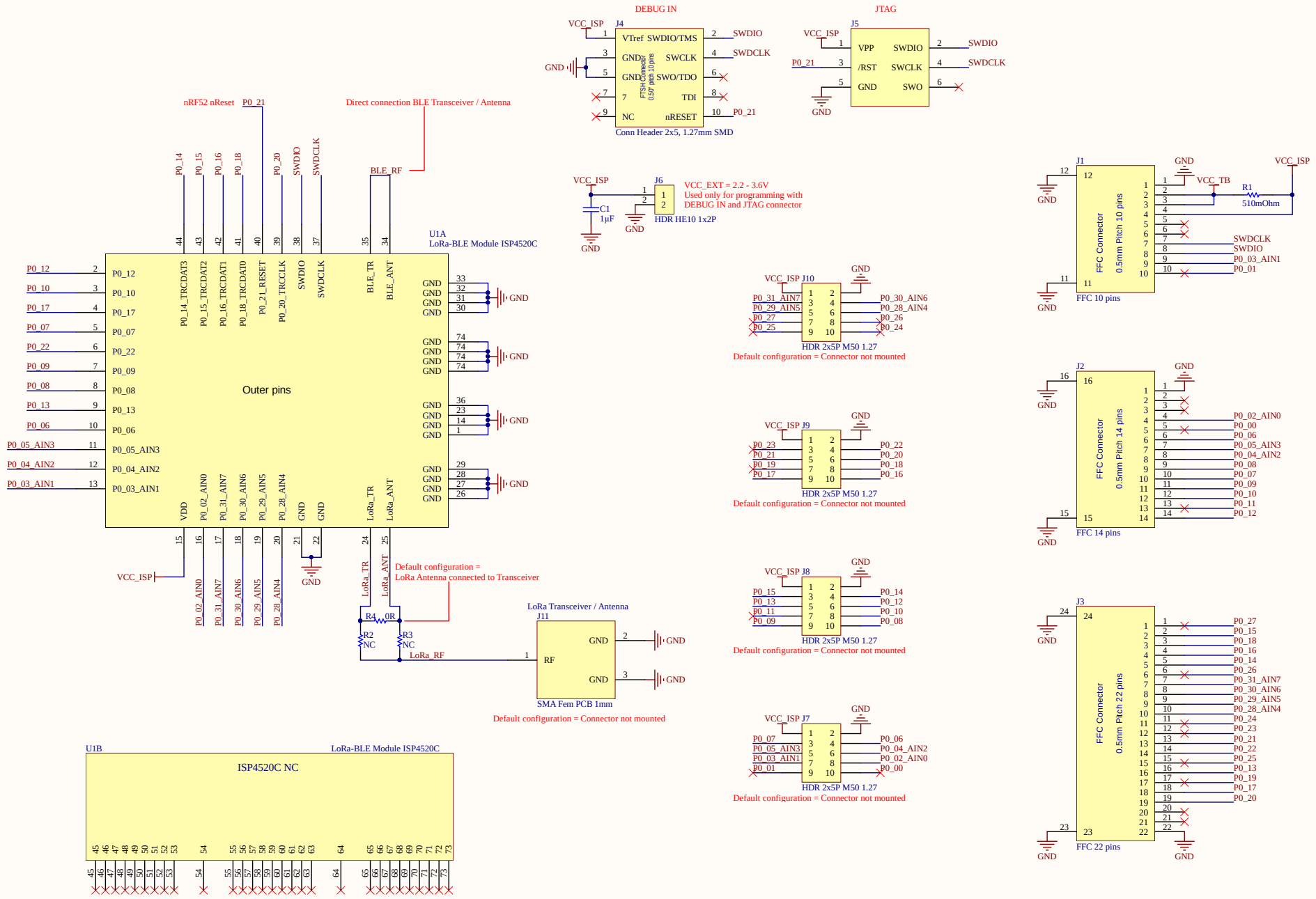

Title	***ISP4520C Customer Test Board***		*Insight SiP* *400 ave Roumanille* *Greenside - Bat 7 - Ent 2* *06906 SOPHIA ANTIPOLIS* *FRANCE*
Size: A3	Project: ISP4520C_TB_R1.PrjPcb	Revision: R1	
Date: 21/02/2019	Time: 15:27:44	Sheet 1 of 1	
File: ISP4520C_TB_R1.SchDoc			