EC 20 flat ∅20 mm, brushless, 5 Watt

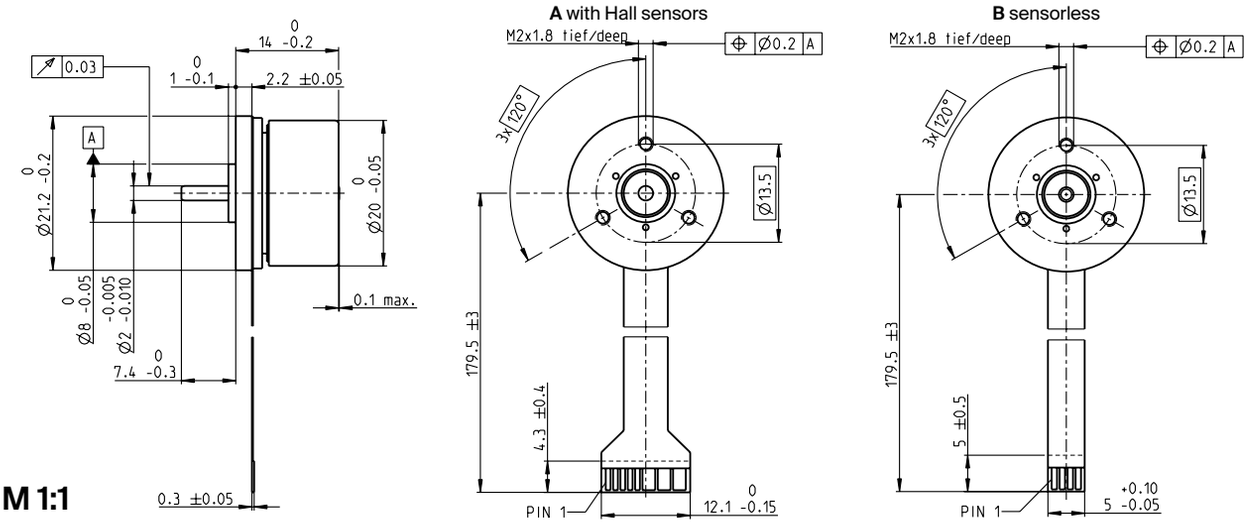

Stock program
Standard program
Special program (on request)

Part Numbers

A with Hall sensors	351005	351006	351007	351008
B sensorless	351054	351055	351056	351057

Motor Data (provisional)					
Values at nominal voltage					
1 Nominal voltage	V	6	9	12	24
2 No load speed	rpm	9350	9430	9380	9300
3 No load current	mA	102	68.3	51.1	25.1
4 Nominal speed	rpm	4780	5310	5170	5220
5 Nominal torque (max. continuous torque)	mNm	7.59	8.58	7.59	7.74
6 Nominal current (max. continuous current)	A	1.31	0.974	0.655	0.329
7 Stall torque[1]	mNm	17.2	22.4	18.9	19.9
8 Stall current	A	2.93	2.54	1.61	0.838
9 Max. efficiency	%	67	71	68	69
Characteristics					
10 Terminal resistance phase to phase	Ω	2.05	3.54	7.45	28.6
11 Terminal inductance phase to phase	mH	0.189	0.424	0.754	3.09
12 Torque constant	mNm/A	5.88	8.82	11.8	23.8
13 Speed constant	rpm/V	1620	1080	812	402
14 Speed/torque gradient	rpm/mNm	567	435	515	484
15 Mechanical time constant	ms	30.3	23.2	27.5	25.8
16 Rotor inertia	gcm²	5.1	5.1	5.1	5.1

Specifications

Thermal data

17 Thermal resistance housing-ambient		16.5 K/W
18 Thermal resistance winding-housing		2.66 K/W
19 Thermal time constant winding		1.77 s
20 Thermal time constant motor		27.5 s
21 Ambient temperature		-40...+100°C
22 Max. winding temperature		+125°C

Mechanical data (preloaded ball bearings)

23 Max. speed		15000 rpm
24 Axial play at axial load	< 2.0 N	0 mm
	> 2.0 N	0.14 mm
25 Radial play		preloaded
26 Max. axial load (dynamic)		1.8 N
27 Max. force for press fits (static)		26 N
(static, shaft supported)		200 N
28 Max. radial load, 5 mm from flange		5.3 N

Other specifications

29 Number of pole pairs	4
30 Number of phases	3
31 Weight of motor	22 g

Values listed in the table are nominal.

Connection	**with Hall sensors**	**sensorless**
Pin 1	V_{Hall} 4.5...24 VDC	Motor winding 1
Pin 2	Hall sensor 3	Motor winding 2
Pin 3	Hall sensor 1	Motor winding 3
Pin 4	Hall sensor 2	⅄ neutral point
Pin 5	GND	
Pin 6	Motor winding 3	
Pin 7	Motor winding 2	
Pin 8	Motor winding 1	
Adapter see p. 514	**Part number** 220300	**Part number** 220310
Connector	**Part number**	**Part number**
TE	1-84953-1	84953-4
Molex	52207-1133	52207-0433

Pin for design with Hall sensors:
FPC, 11-pol, Pitch 1.0 mm, top contact style
Wiring diagram for Hall sensors see p. 49

[1]Calculation does not include saturation effect (p. 61/168)

Operating Range

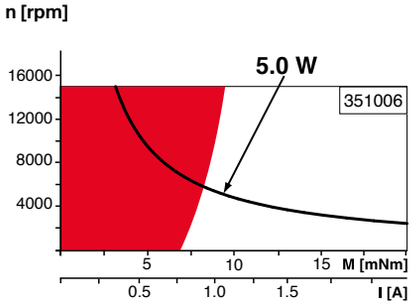

Comments

Continuous operation
In observation of above listed thermal resistance (lines 17 and 18) the maximum permissible winding temperature will be reached during continuous operation at 25°C ambient.
= Thermal limit.

Short term operation
The motor may be briefly overloaded (recurring).

Assigned power rating

maxon Modular System Details on catalog page 38

Planetary Gearhead
∅22 mm
0.5 - 2.0 Nm
Page 374/377

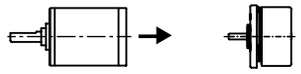

Recommended Electronics:

Notes	Page **38**
ESCON Module 24/2	486
ESCON 36/3 EC	487
ESCON Mod. 50/4 EC-S	487
DEC Module 24/2	491
EPOS4 Micro 24/5	495
EPOS4 Mod./Comp. 24/1.5	496
EPOS4 Comp. 24/5 3-axes	497