HF Connectors

Female Connector BNC 50 Ω, straight

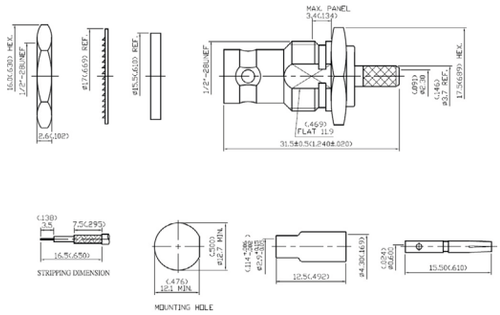

SPECIFICATION:

Mounting	Panel mount
Housing Material	Brass/Nickel-plated
Series	BNC
Frequency	4 GHz
Gender	Female
Insulation material	Teflon
Impedance	50 Ω
CAT Catalogue Description 2	Nut - Brass, Nickel-plated - Crimp Ferrule - Brass, Nickel-plated - Washer - Steel, Nickel-plated - Gasket - Silicon - Chassis - Brass, Nickel-plated
Connector Design	straight
Connection, attachment	Crimp 1.8 mm
Connection, shield	Crimp 4.6 mm
Cable type	RG-174U
Contacts	gold-plated/Brass

PRODUCT RANGE:
Art. Nr.
RND 205-00434

Untitled-8 2 7/5/2016 11:04:46 AM