PS61 – OEM Subminiature Pressure Switch

- 15 to 3000 psi (1 to 207 bar) *formerly PS-J series*
- Exceptional Size-to-Pressure-Range Ratio
- Adjustable or Factory Set

These compact pressure switches are designed for OEM applications. They are equipped with high proof pressure capabilities for demanding hydraulic applications such as forklifts, scissor lifts, and off road equipment.

Specifications

Operating Temperature	-40°F to +200°F (-40°C to +93°C)
Switch*	100 VA Max.
Repeatability	±3% of Full Set Point Range @ 70°F (20°C)
Wetted Parts	
Diaphragm	Nitrile (optional Neoprene, EPDM or Viton®)
Fitting	Zinc Plated Steel (optional 316 Stainless Steel)
Electrical Termination	Exposed Terminals IP00; IP option IP66
Deadband	<5% of Set Point
Proof Pressure	9000 psi (600 bar)
Approvals	CE (limits switch voltage to 42 VDC)
Weight, Approximate	Brass: 0.14 lbs. (0.06 kg)

*Gold contacts (option G) may be required for less than 12 VDC and 20 mA.
Kapton® and Viton® are registered trademarks of Dupont.

Dimensions

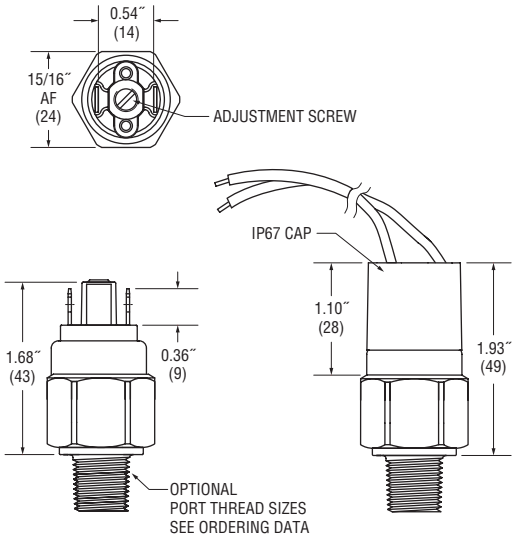

1/4″ Spades

Flying Leads with IP option

How To Order

Use the **Bold** characters from the chart below to construct a product code.

SELECT **PS61** **-10** **-4MNZ** **-A** **-SP** **-XX** **-XXXX**

1. Pressure Range Code
   Insert Pressure Range Code from table below right
2. Pressure Fitting[1]

12L14 Zinc Plated Steel	316 Stainless Steel
-2MNZ 1/8″ NPTM 12L14	**-2MNS** 1/8″ NPTM
-4MNZ 1/4″ NPTM 12L14	**-4MNS** 1/4″ NPTM
-2MGZ 1/8″ BSPM 12L14	**-2MGS** 1/8″ BSPM
-4MGZ 1/4″ BSPM 12L14	**-4MGS** 1/4″ BSPM
-4MSZ 7/16″-20 SAE Male	**-4MSS** 7/16″-20 SAE Male
-6MSZ 9/16″-18 SAE Male	**-6MSS** 9/16″-18 SAE Male
-8MSZ 3/4″-16 SAE Male	
-M10Z M10 x 1.0, Straight	
-M12Z M12 x 1.5, Straight	

3. Circuit
   -A SPST/NO; **-B** SPST/NC
4. Electrical Termination
   -SP Spade Terminals (standard); **-TS** Terminal Screws; **-FLXX** Flying Leads[2];
   -FLSXX Flying Leads w/PVC Shrink Tubing[2]; **-CABXX** 18 AWG PVC Cable[3]
5. Options
   -V Viton® Diaphragm; **-E** EPDM Diaphragm; **-N** Neoprene Diaphragm;
   -H ECOH Diaphragm; **-G** Gold Contacts (for loads less than 12 mA @ 12 VDC);
   -IP Ingress Protection[4]; **-R** Restrictor (low damping coefficient) Brass;
   -SR Spiral Restrictor (high damping coefficient) 12L14 Steel w/Black Oxide Finish;
   -OXY Oxygen Cleaned; **-RB** Rubber Boot (shipped loose);
   -WF Weather Pack Connector, Female; **-WM** Weather Pack Connector, Male;
   -DE Deutsch Connector, Male, DT04 Series
6. Fixed Set Point (optional)
   A. Specify set point **-FS** (in PSI or BAR, see example)[5]
   B. Set Point Actuation
      R on Rising Pressure; **F** on Falling Pressure
   Example: **-FS3BARF** for 3 BAR Falling or **-FS60PSIR** for 60 PSI Rising

Notes:
1. Other connectors available. Consult factory.
2. 18″ is standard. Specify lead length in inches (max. 48″). e.g. **-FL18** or **-FLS30**.
3. 36″ is minimum. Specify cable length in inches. e.g. **-CAB36** or **-CAB120**.
4. Ingress Protection is available only with **-FL**, **-FLS** or **-CAB** Electrical Termination choices and requires Fixed Set Point (**-FS**).
5. Set Point must be within Pressure Range selected in Step 1 above.

Pressure Range Table

Pressure Range Code	Adjustment Ranges
11	15-60 psi (1-4 bar)
15	40-150 psi (3-10 bar)
19	75-275 psi (5.17-17.2 bar)
25	150-500 psi (10.3-34.5 bar)
35	400-1100 psi (27.6-75.8 bar)
50	1000-3000 psi (69.0-206.8 bar)