Specifications:

Contact rating:	12 V DC, 200 mA / 6 V DC, 300 mA
Contact resistance:	< 70 mΩ
Insulation resistance:	> 100 MΩ at 500 V DC
Dielectric strength:	500 V, 50 Hz for the duration of 1 minute
Mechanical life:	minimum 10 000 operations
Contacts / Terminals:	copper alloy, silver-plated
Contact timing:	non-shorting
Slide colour:	white

Models:	Switching functions
MMS 228 T	on on
MMS 238 T	on on on

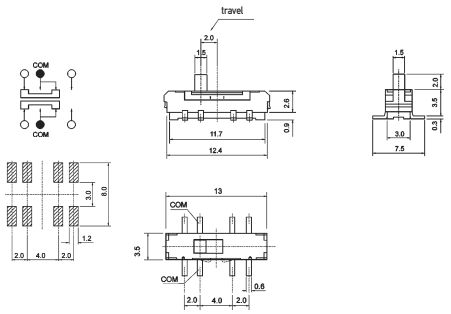

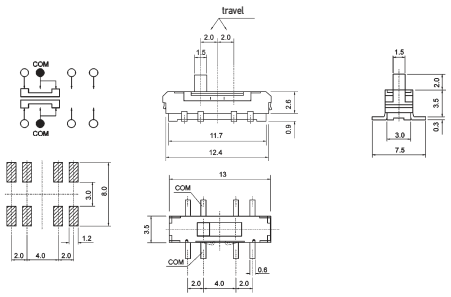

Soldering conditions: reflow-soldering – max.: 20 sec, 200° C
peak temperature: 250° C

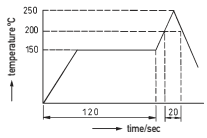
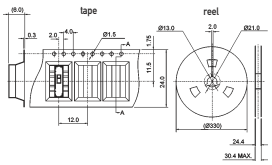
Packaging: on tapes, 900 pieces / tape