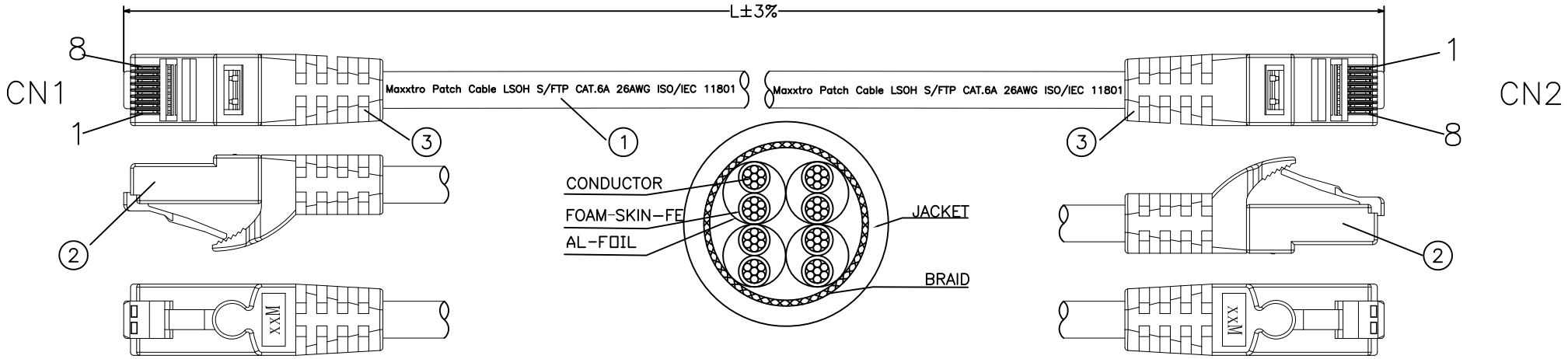

ITEM NO	LENGTH	LSOH COLOR	PACKING
PB-SFTP6A-025	250±15mm	GREY 016	ZB-M
PB-SFTP6A-05	500±15mm	GREY 016	ZB-M
PB-SFTP6A-1	1000±20mm	GREY 016	ZB-M
PB-SFTP6A-2	2000±40mm	GREY 016	ZB-L
PB-SFTP6A-3	3000±60mm	GREY 016	ZB-L
PB-SFTP6A-5	5000±110mm	GREY 016	ZB-L
PB-SFTP6A-7	7500±150mm	GREY 016	ZB-L
PB-SFTP6A-10	10000±200mm	GREY 016	ZB-XL
PB-SFTP6A-15	15000±300mm	GREY 016	ZB-XL
PB-SFTP6A-20	20000±400mm	GREY 016	ZB-XL
PB-SFTP6A-025-YE	250±15mm	YELLOW 040	ZB-M
PB-SFTP6A-05-YE	500±15mm	YELLOW 040	ZB-M
PB-SFTP6A-1-YE	1000±20mm	YELLOW 040	ZB-M
PB-SFTP6A-2-YE	2000±40mm	YELLOW 040	ZB-L
PB-SFTP6A-3-YE	3000±60mm	YELLOW 040	ZB-L
PB-SFTP6A-5-YE	5000±110mm	YELLOW 040	ZB-L
PB-SFTP6A-7-YE	7500±150mm	YELLOW 040	ZB-L
PB-SFTP6A-10	10000±200mm	YELLOW 040	ZB-XL
PB-SFTP6A-025-BL	250±15mm	BLUE 051	ZB-M
PB-SFTP6A-05-BL	500±15mm	BLUE 051	ZB-M
PB-SFTP6A-1-BL	1000±20mm	BLUE 051	ZB-M
PB-SFTP6A-2-BL	2000±40mm	BLUE 051	ZB-L
PB-SFTP6A-3-BL	3000±60mm	BLUE 051	ZB-L
PB-SFTP6A-5-BL	5000±110mm	BLUE 051	ZB-L
PB-SFTP6A-7-BL	7500±150mm	BLUE 051	ZB-L
PB-SFTP6A-10	10000±200mm	BLUE 051	ZB-XL
PB-SFTP6A-1-BK	1000±20mm	BLACK 090	ZB-M
PB-SFTP6A-2-BK	2000±40mm	BLACK 090	ZB-L
PB-SFTP6A-3-BK	3000±60mm	BLACK 090	ZB-L
PB-SFTP6A-5-BK	5000±110mm	BLACK 090	ZB-L
PB-SFTP6A-7-BK	7500±150mm	BLACK 090	ZB-L
PB-SFTP6A-10-BK	10000±200mm	BLACK 090	ZB-XL
PB-SFTP6A-1-GN	1000±20mm	GREEN 060	ZB-M
PB-SFTP6A-2-GN	2000±40mm	GREEN 060	ZB-L
PB-SFTP6A-3-GN	3000±60mm	GREEN 060	ZB-L
PB-SFTP6A-5-GN	5000±110mm	GREEN 060	ZB-L
PB-SFTP6A-7-GN	7500±150mm	GREEN 060	ZB-L
PB-SFTP6A-10-GN	10000±200mm	GREEN 060	ZB-XL
PB-SFTP6A-1-VI	1000±20mm	VIOLET 020	ZB-M
PB-SFTP6A-2-VI	2000±40mm	VIOLET 020	ZB-L
PB-SFTP6A-3-VI	3000±60mm	VIOLET 020	ZB-L
PB-SFTP6A-5-VI	5000±110mm	VIOLET 020	ZB-L
PB-SFTP6A-7-VI	7500±150mm	VIOLET 020	ZB-L
PB-SFTP6A-10	10000±200mm	VIOLET 020	ZB-XL

ELECTRONIC TEST:

A.OPEN/SHORT/INTERMITTENCE: 100%.

B.ISO PATCH CORD CAT6A :100%

MATERIAL LIST:

NO.	PARTS NAME	SPECIFICATION DESCRIPTION
①	CABLE	S/FTP (26AWG*1PR+A)*4+B(TC)+LSOH OD:5.8±0.2mm COLOR:Assorted upon request
②	RJ45 CONNECTOR	RJ45,8P8C,TWO FORK GOLD PLATED CONTACTS 50U" WITH METAL HOUSING
③	MOLDING PVC	MOLDING PVC 45P COLOR:Assorted upon request

Marking: Maxxtro Patch Cable LSOH S/FTP CAT.6A 26AWG ISO/IEC 11801

PIN OUT

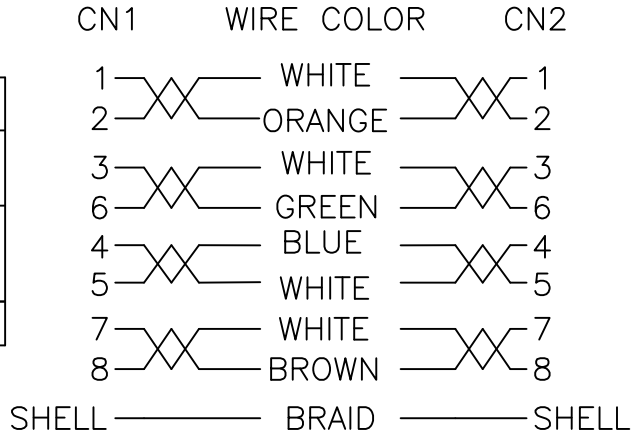

REMARK	NO	CHA.NO		SIGNATURE	DATE			
DRAWN BY		Renzhi				SIGN	W.T	SCALE
CHECKED BY								
AUDITED BY		lubaocheng	APPROVED BY	hanrenzhi				
CRAFT			DATE	2014.12.15		PAGE OF		

Maxxtro®

S/FTP CAT6A 26AWG

ITEM NO. (SECTION SHEET)