Panasonic

KT4H/B
Temperature Controller
User's Manual

ARCT1F412E-5

2011. 1 | panasonic-electric-works.net/sunx

Panasonic Elecrtic Works SUNX

CONTENTS

1. Model number Page
1.1 Model number ---- 5
1.2 How to read the rated label ---- 5
2. Name and functions of the sections ---- 6
3. External dimensions
3.1 External dimensions ---- 7
3.2 Tool cable (AKT4H820) external dimensions ---- 7
3.3 CT (Current transformer) external dimensions ---- 7
3.4 Terminal cover (AKT4H801) external dimensions ---- 8
4. Mounting to the control panel ---- 9
4.1 Panel cutout ---- 9
4.2 Mounting and removal to/from the control panel ---- 9
5. Wiring
5.1 Terminal arrangement ---- 10
5.2 Lead wire solderless terminal ---- 10
5.3 Wiring of Heater burnout alarm ---- 10
6. Settings
6.1 Setting procedures ---- 11
6.2 Setup ---- 11
6.3 Basic operation of settings ---- 11
6.4 Operation flowchart ---- 12
6.5 Main setting mode ---- 13
6.6 Sub setting mode ---- 14
6.7 Auxiliary function setting mode ---- 16
6.8 Setup mode ---- 18
7. Operation
7.1 Starting operation---- 23
7.2 Control output OFF function---- 23
7.3 Auto/Manual control switching ---- 24
7.4 Indicating Output MV (manipulated variable) ---- 24
7.5 Auto-tuning/Auto-reset Perform/Cancel ---- 24
8. Basic usage
8.1 ON/OFF control ---- 25
8.2 PID control ---- 25
8.3 How to use the alarm output ---- 25
8.4 Changing PV color ---- 26
9. Auto-reset and ARW
9.1 Auto-reset ---- 27
9.2 ARW (Anti-reset windup) ---- 27
10. Auto-tuning ---- 28
11. Action explanation
11.1 OUT1 PID, PI, PD, P actions ---- 29
11.2 OUT1 ON/OFF action ---- 29
11.3 Heater burnout alarm action ---- 30
11.4 Alarm action ---- 30
11.5 OUT2 (Heating/Cooling control) action [Reverse (Heating) action] ---- 31
11.6 OUT2 (Heating/Cooling control) action [Reverse (Heating) action] (When setting dead band) ---- 31
11.7 OUT2 (Heating/Cooling control) action [Reverse (Heating) action] (When setting overlap band) ---- 32
11.8 OUT2 (Heating/Cooling control) action [Direct (Cooling) action] ---- 32
11.9 OUT2 (Heating/Cooling control) action [Direct (Cooling) action] (When setting dead band) ---- 33
11.10 OUT2 (Heating/Cooling control) action [Direct (Cooling) action] (When setting overlap band) ---- 33
11.11 SV rise rate, SV fall rate setting action ---- 34
12. Communication
12.1 System configuration ---- 36
12.2 Wiring ---- 36
12.3 Communication parameter setting ---- 38
12.4 Communication procedures ---- 39
12.5 MEWTOCOL ---- 40
12.6 Modbus protocol ---- 47
13. Specifications
13.1 Standard specifications ---- 57
13.2 Optional specifications ---- 60
14.Troubleshooting
14.1 Indication ---- 62
14.2 Key operation ---- 63
14.3 Control ---- 63
14.4 Communication---- 64

Preface

Thank you for purchasing this **Panasonic**® Temperature controller KT4H/B.
This manual contains instructions for the mounting, functions, operations and notes when operating the KT4H/B.
For model confirmation and unit specifications, please read this manual carefully before starting operation.
To prevent accidents arising from the misuse of this controller, please ensure the operator receives this manual.

Notes

- **This instrument should be used in accordance with the specifications described in the manual. If it is not used according to the specifications, it may malfunction or cause fire.**
- **Be sure to follow the warnings, cautions and notices. Not doing so could cause serious injury or accidents.**
- **The contents of this instruction manual are subject to change without notice.**
- **Care has been taken to assure that the contents of this instruction manual are correct, but if there are any doubts, mistakes or questions, please inform our sales department.**
- **This instrument is designed to be installed in a control panel. If it is not, measures must be taken to ensure that the operator cannot touch power terminals or other high voltage sections.**
- **Any unauthorized transfer or copying of this document, in part or in whole, is prohibited.**
- Panasonic Electric Works Co., Ltd. **is not responsible for any damages or secondary damages incurred as a result of using this product, including any indirect damages.**

Safety precautions (Be sure to read these precautions before using this instrument.)

The safety precautions are classified into categories: "Warning" and "Caution".
Depending on circumstances, procedures indicated by ⚠ Caution may be linked to serious results, so be sure to follow the directions for usage.

⚠ Warning

Procedures which may lead to dangerous conditions and cause death or serious injury, if not carried out properly.

⚠ Caution

Procedures which may lead to dangerous conditions and cause superficial to medium injury or physical damage or may degrade or damage the product, if not carried out properly.

⚠ Warning

- **To prevent an electric shock or fire, do not handle the inner assembly.**
- **To prevent an electric shock, fire or damage to instrument, do not replace parts.**

⚠ Safety precautions

- **To ensure safe and correct use, thoroughly read and understand this manual before using this instrument.**
- **This instrument is intended to be used for industrial machinery, machine tools and measuring equipment. Verify correct usage after consulting purpose of use with our agency or main office. (Never use this instrument for medical purposes with which human lives are involved.)**
- **External protection devices such as protection equipment against excessive temperature rise, etc. must be installed, as malfunction of this product could result in serious damage to the system or injury to personnel.**
- **This instrument must be used under the conditions and environment described in this manual.** Panasonic Electric Works Co., Ltd. **does not accept liability for any injury, loss of life or damage occurring due to the instrument being used under conditions not otherwise stated in this manual.**

Caution with respect to Export Trade Control Ordinance

To avoid this instrument from being used as a component in, or as being utilized in the manufacture of weapons of mass destruction (i.e. military applications, military equipment, etc.), please investigate the end users and the final use of this instrument. In the case of resale, ensure that this instrument is not illegally exported.

Precautions

1. Installation precautions

⚠ Caution

This instrument is intended to be used under the following environmental conditions (IEC61010-1): Overvoltage category Ⅱ, Pollution degree 2
Ensure the mounting location corresponds to the following conditions:
- **A minimum of dust, and an absence of corrosive gases**
- **No flammable, explosive gases**
- **No mechanical vibrations or shocks**
- **No exposure to direct sunlight, an ambient temperature of 0 to 50℃ (32 to 122℉) that does not change rapidly**
- **An ambient non-condensing humidity of 35 to 85%RH**
- **No large capacity electromagnetic switches or cables through which large current is flowing**
- **No water, oil or chemicals or where the vapors of these substances can come into direct contact with the unit**

Note: Do not install this instrument near flammable material even though the case of this instrument is made of flame resistant resin.
Avoid setting this instrument directly on flammable material.

2. Wiring precautions

⚠ Caution

- **Do not leave bits of wire in the instrument, because they could cause fire or malfunction.**
- **Use the solderless terminal with an insulation sleeve in which the M3 screw fits when wiring the KT4H/B.**
- **The terminal block of this instrument is designed to be wired from the left side. The lead wire must be inserted from the left side of the terminal, and fastened with the terminal screw.**
- **When using a Terminal cover (AKT4H801), pass terminal wires numbered 7 to 12 into the holes of the terminal cover. See (Fig. 3.4-2) on page 8.**
- **Tighten the terminal screw to within the specified torque. If excessive force is applied to the screw when tightening, the terminal screw or case may be damaged.**
- **This controller does not have a built-in power switch, circuit breaker or fuse. It is necessary to install them near the controller. (Recommended fuse: Time-lag fuse, rated voltage 250V AC, rated current 2A)**
- **For a 24V AC/DC power source, do not confuse polarity when using direct current (DC).**
- **Do not apply a commercial power source to the sensor which is connected to the input terminal nor allow the power source to come into contact with the sensor.**
- **To extend a thermocouple's lead wire, be sure to use a compensating lead wire in accordance with the sensor input specification. (If any other compensating lead wire is used, a temperature indication error may be caused.)**
- **Use the 3-wire RTD according to the sensor input specifications of this controller.**
- **(+) side input terminal number of 0 to 5V DC, 1 to 5V DC, 0 to 10V DC differs from that of 0 to 1V DC. (+) side input terminal number of 0 to 5V DC, 1 to 5V DC, 0 to 10V DC: 9 (+) side input terminal number of 0 to 1V DC: 10**
- **When using a relay contact output type, use a relay according to the capacity of the load to protect the built-in relay contact.**
- **When wiring, keep input wires (thermocouple, RTD, etc.) away from AC sources or load wires to avoid external interference.**

3. Operation and maintenance precautions

⚠ Caution

- **It is recommended that the PID auto-tuning be performed on the trial run.**
- **Do not touch live terminals. This may cause electric shock or problems in operation.**
- **Turn the power supply to the instrument OFF before retightening the terminal and cleaning. Working or touching the terminal with the power switched ON may result in severe injury or death due to Electric Shock.**
- **Use a soft, dry cloth when cleaning the instrument. (Alcohol based substances may deface or tarnish the unit.)**
- **As the display section is vulnerable, do not strike or scratch it with a hard object.**

1. Model number

1.1 Model number

AKT4 □ □ 1 □ □ □ □ □

(1) (2) (3) (4) (5) (6) (7) (8)

(1) Color ---------- H: Gray, B: Black
(2) Supply voltage ---------- 1: 100 to 240V AC 2: 24V AC/DC
(3) Input type ---------- 1: Multi-input (Thermocouple, RTD, DC current and DC voltage can be selected by key operation)
(4) Control output (OUT1) ---------- 1: Relay contact 2: Non-contact voltage (for SSR drive)
3: DC current
(5) Alarm output ---------- 1: 1 point (1a) 2: 2 points (1a+1a)
(Alarm type and Energized/Deenergized can be selected by key operation)
(If 2 points of alarm are selected, Heating/Cooling control cannot be added.)
(6) Heating/Cooling control (OUT2) --------- 0: Not available 1: Relay contact
2: Non-contact voltage (for SSR drive)
(7) Heater burnout alarm ---------- 0: Not available 3: Single phase 20A 4: Single phase 50A
5: 3-phase 20A 6: 3-phase 50A
(Heater burnout alarm is not available for the DC current output type.)
(If Heating/Cooling control is selected, Heater burnout alarm cannot be added.)
(8) Serial communication/Contact input - Blank: Not available 1: Serial communication 2: Contact input

1.2 How to read the rated label

The rated label is attached to the case.

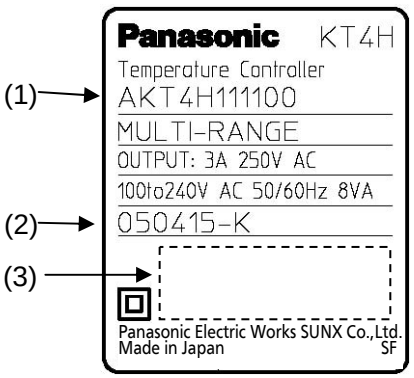

(Example)
Supply voltage: 100 to 240V AC
Input type: Multi-input
Control output (OUT1): Relay contact
Alarm output: 1 point (1a)
Heating/Cooling control (OUT2) is not added.
Heater burnout alarm is not added.
Serial communication/Contact input is not added.

(Fig.1.2-1)

(1): Model number, supply voltage, input type, output type, etc. are entered.
(2): Lot number is entered.
(3): Safety standard markings

2. Name and functions of the sections

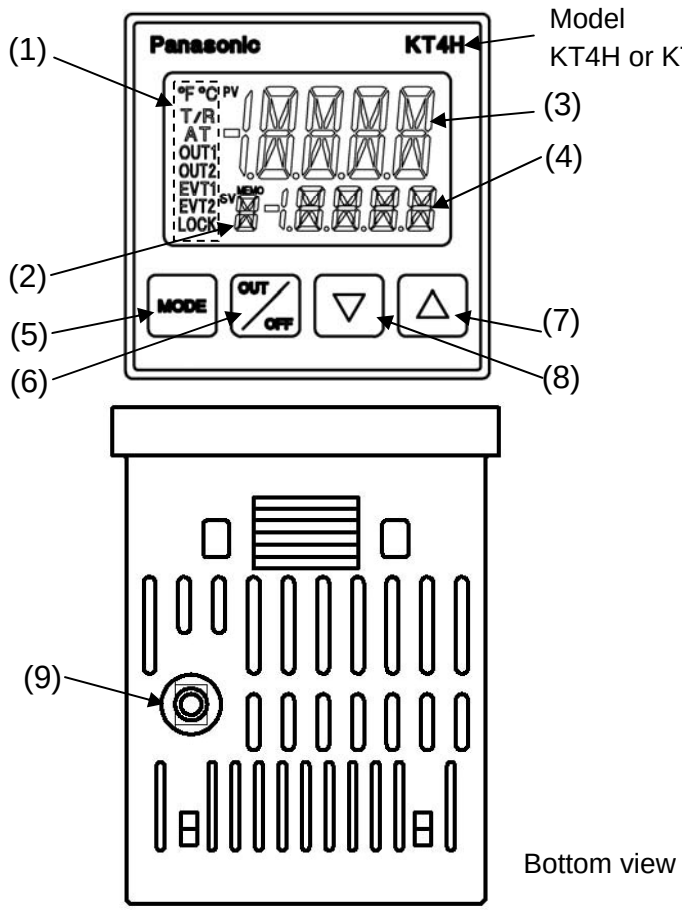

(Fig. 2-1)

■ Display

(1) **Action indicators**

°F °C : Lights respectively when temperature unit °F/°C is selected.

T/R : Lights during Serial communication (optional) TX output.

AT : Flashes during auto-tuning or auto-reset.

OUT1 : Lights when control output is ON or Heating output (optional) is ON.
For DC current output type, it flashes corresponding to the manipulated variable in 0.25 second cycles.

OUT2 : Lights when Cooling output (optional) is ON.

EVT1 : Lights when Alarm 1 output is ON.

EVT2 : Lights when Alarm 2 output (optional) is ON or Heater burnout alarm (optional) is ON.

LOCK: Lights when Lock 1, Lock 2 or Lock 3 is selected.

(2) **MEMO display** : Indicates the set value memory number.

(3) **PV display** : Indicates the PV (process variable).

(4) **SV display** : Indicates the SV (set value).

■ Operations

(5) MODE **Mode key** : Selects the setting mode, and registers the set value.

(6) OUT/OFF **OUT/OFF key** : The control output ON/OFF or Auto/Manual control can be switched.

(7) △ **Increase key** : Increases the numeric value.

(8) ▽ **Decrease key** : Decreases the numeric value.

(9) **Tool connector** : By connecting the tool cable (AKT4H820, sold separately), the following operations can be conducted from the external computer using the exclusive tool software.
(1) Reading and setting of SV, PID and various set values from external computer
(2) Reading of PV and action status
(3) Function change
Cannot be used with Serial communication option.
Please download the exclusive tool software from our website.

3. External dimensions

3.1 External dimensions (Unit: mm)Common to KT4H/B

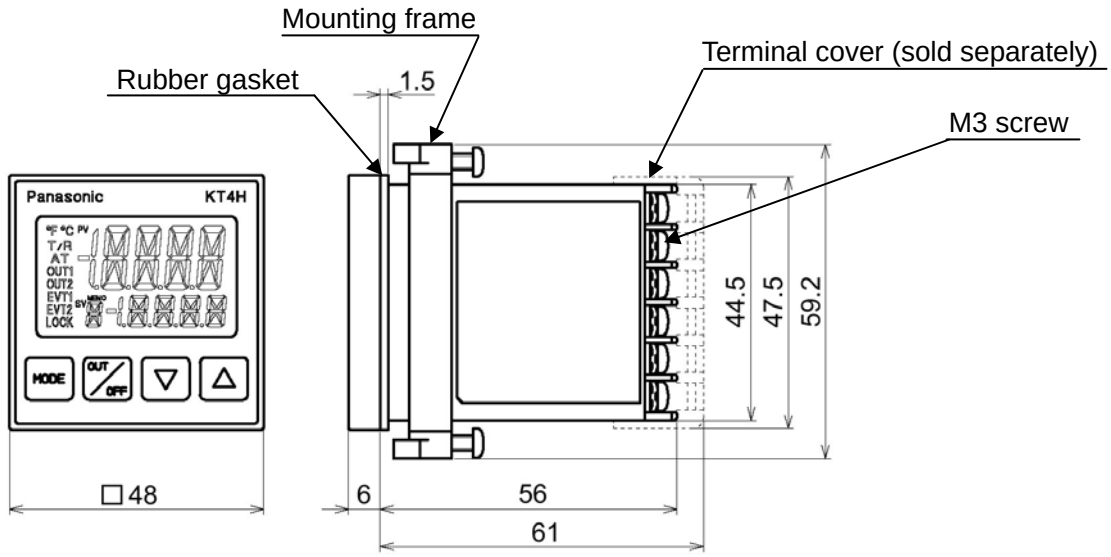

(Fig. 3.1-1)

3.2 Tool cable (AKT4H820) external dimensions (Unit: mm)

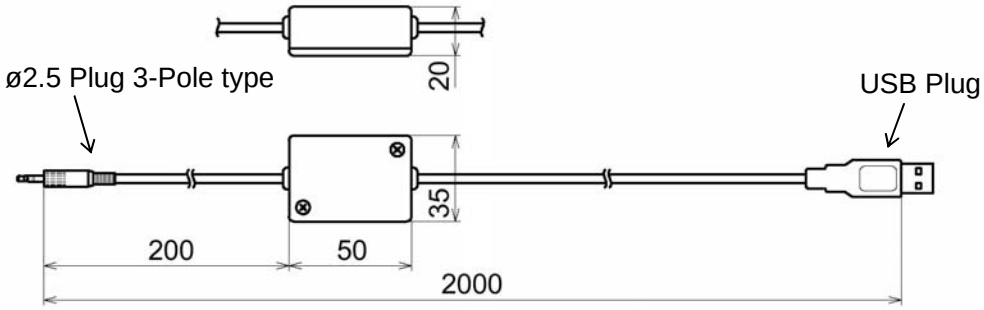

(Fig. 3.2-1)

3.3 CT (current transformer) external dimensions (Unit: mm)

AKT4815 (for 20A)

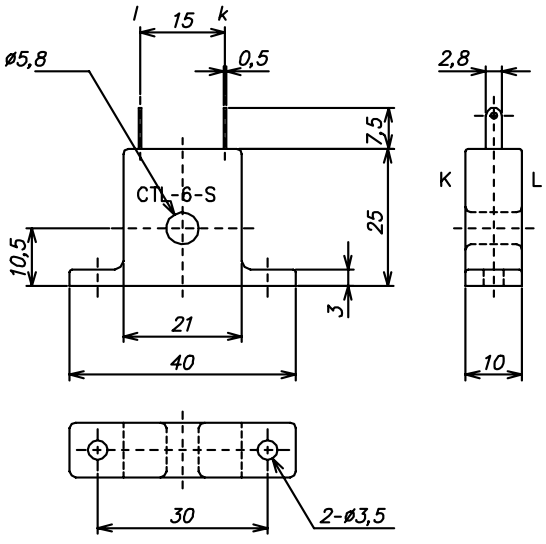

AKT4816 (for 50A)

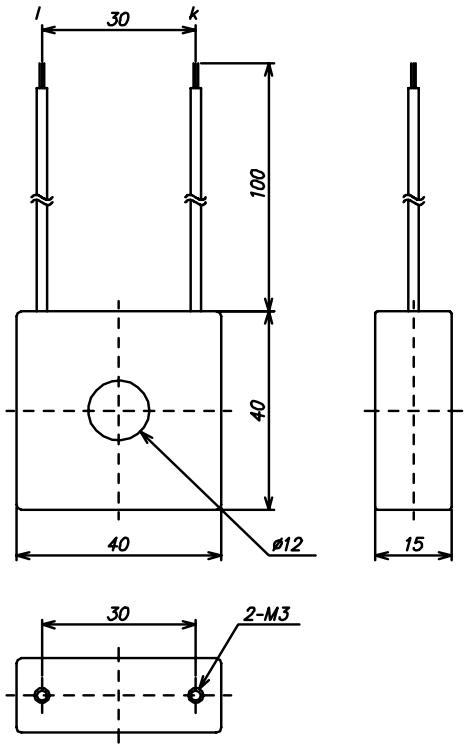

(Fig. 3.3-1)

3.4 Terminal cover (AKT4H801) external dimensions (Unit: mm)

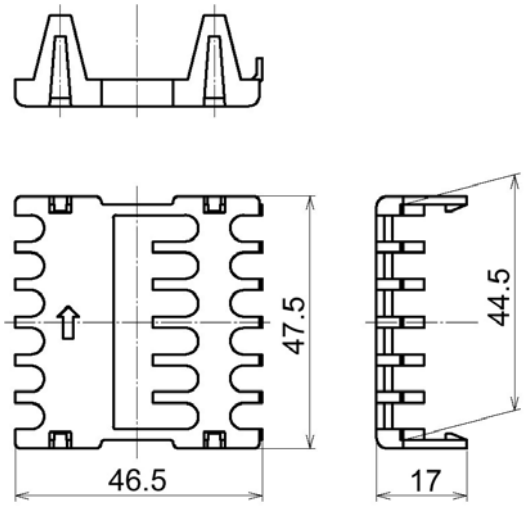

(Fig. 3.4-1)

Note when using a Terminal cover (AKT4H801)

When using a Terminal cover (AKT4H801), pass terminal wires numbered 7 to 12 into the holes of the terminal cover. See (Fig. 3.4-2).

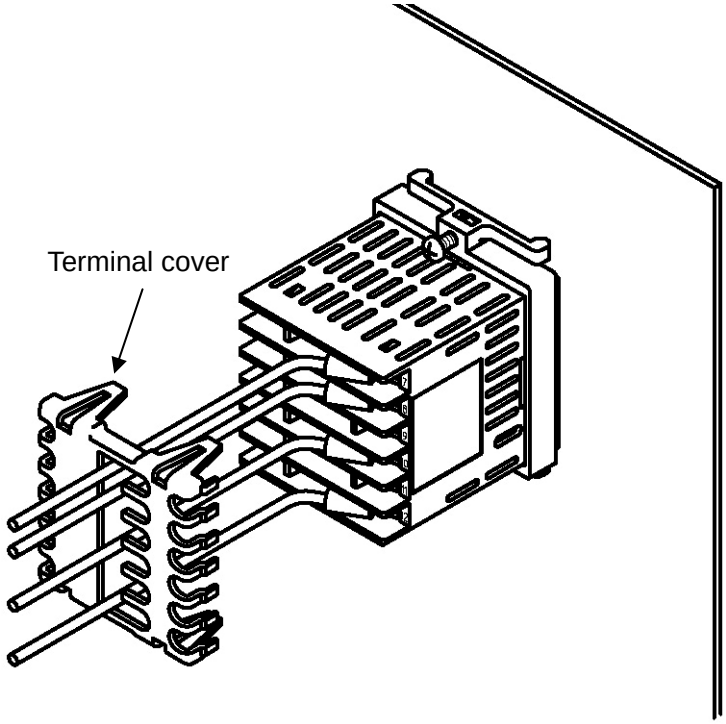

(Fig. 3.4-2)

4. Mounting to the control panel

4.1 Panel cutout (Unit: mm)

> **Caution**
> **If lateral close mounting is used for the controller, IP66 specification (Dust-proof/Drip-proof) may be compromised, and all warranties will be invalidated.**

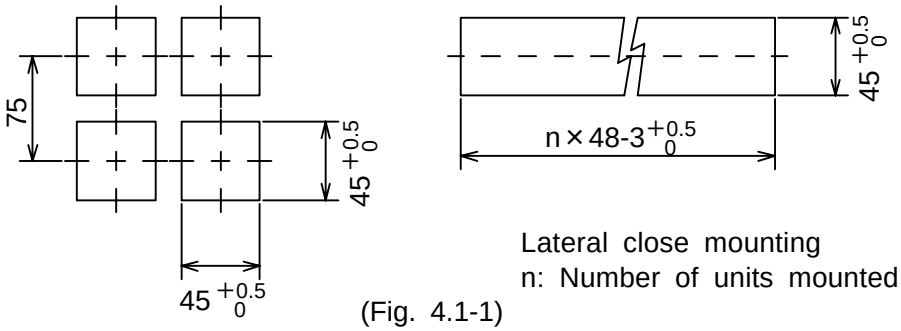

Lateral close mounting
n: Number of units mounted

(Fig. 4.1-1)

4.2 Mounting and removal to/from the control panel

> **Caution**
> **As the mounting frame is made of resin, do not use excessive force while tightening screws, or the mounting frame could be damaged.**
> **Tighten screws with one rotation upon the screw tips touching the panel.**
> **The torque is approximately 0.05 to 0.06 N•m.**

How to mount the KT4H

Mount the controller vertically to the flat, rigid panel to ensure it adheres to the Dust-proof/Drip-proof specification (IP66).

Mountable panel thickness: 1 to 5mm

(1) Insert the controller from the front side of the panel. (Fig. 4.2-1)

(2) Insert the mounting frame until the frame tips come into contact with the panel, and fasten with screws.
Tighten screws with one rotation upon the screw tips touching the panel.
The torque is approximately 0.05 to 0.06 N•m. (Fig. 4.2-2)

How to remove the mounting frame (Fig. 4.2-3)

(1) Turn the power to the unit OFF, and disconnect all wires before removing the mounting frame.

(2) Insert a flat blade screwdriver between the screw frame and unit ①.

(3) Slowly push the frame upward using the screwdriver ②, while pushing the unit toward the panel ③.

(4) Repeat step (2) and slowly push the frame downward using the screwdriver for the other side.
The frame can be removed little by little by repeating these steps.

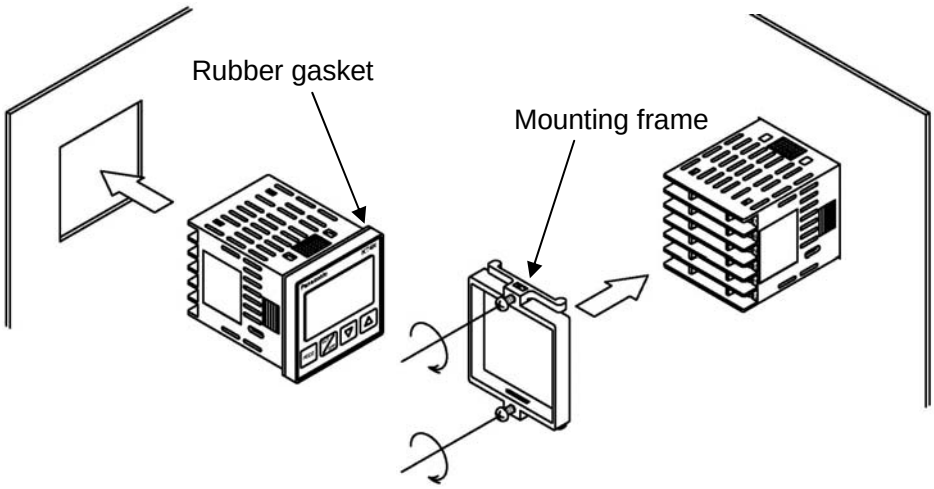

(Fig. 4.2-1)

(Fig. 4.2-2)

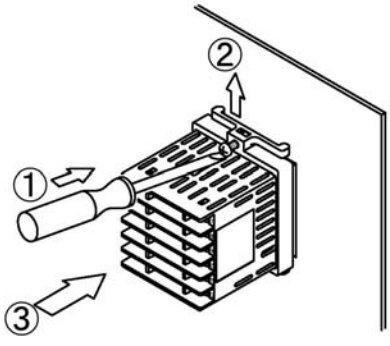

(Fig. 4.2-3)

5. Wiring

⚠ Warning

Turn the power supply to the instrument off before wiring.
Working or touching the terminal with the power switched on may result in severe injury or death due to Electric Shock.

5.1 Terminal arrangement

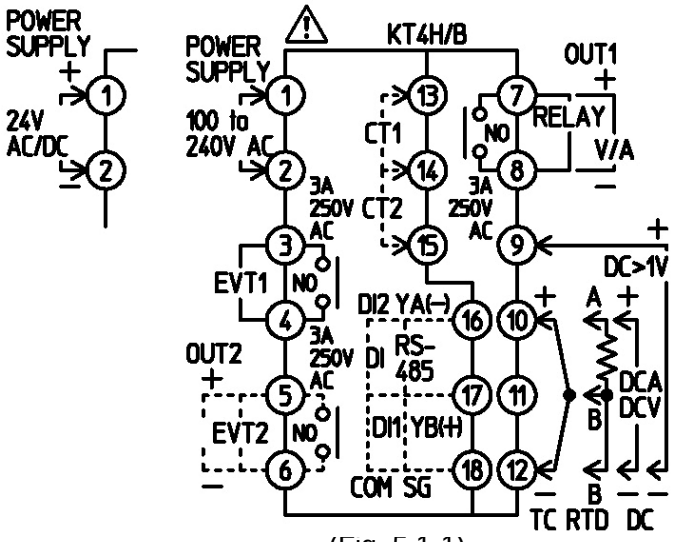

(Fig. 5.1-1)

- EVT1 : Alarm 1 output
- EVT2 : Alarm 2 output (option) or Heater burnout alarm output (option) (Utilize common output terminals.)
- OUT1 : Control output or Heating output (option)
- OUT2 : Cooling output (option)
- TC : Thermocouple input
- RTD : Resistance temperature detector input
- DC : DC current, DC voltage input **(For DC voltage input, + side terminal number differs depending on the voltage.)**
- CT1 : Current transformer input 1 (Option: Single phase, 3-phase)
- CT2 : Current transformer input 2 (Option: 3-phase)
- DI : Contact input (option)
- RS-485: Serial communication RS-485 (option)

When using a Terminal cover (AKT4H801), refer to Section "3.4 Note when using a Terminal cover (AKT4H801)" on p.8.

5.2 Lead wire solderless terminal

Use a solderless terminal with an insulation sleeve in which an M3 screw fits as shown below.
The torque is approximately 0.63N•m.

Solderless terminal	Manufacturer	Model	Tightening torque
Y type	Nichifu Terminal Industries CO.,LTD.	TMEV1.25Y-3	0.63N•m
	Japan Solderless Terminal MFG CO.,LTD.	VD1.25-B3A	
Round type	Nichifu Terminal Industries CO.,LTD.	TMEV1.25-3	
	Japan Solderless Terminal MFG CO.,LTD.	V1.25-3	

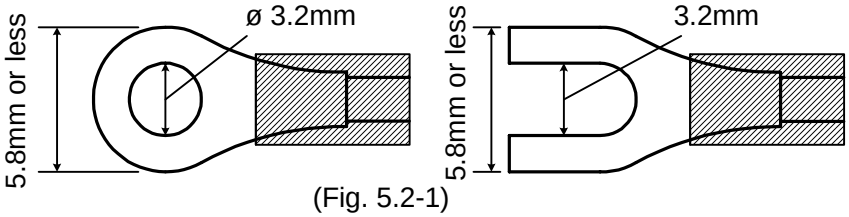

(Fig. 5.2-1)

5.3 Wiring of Heater burnout alarm (Option: Single phase, 3-phase)

This alarm is not usable for detecting heater current under phase control.

Use the current transformer (CT) provided, and pass one lead wire of the heater circuit into the hole of the CT. (Fig. 5.3-1)

When wiring, keep the CT wire away from AC sources or load wires to avoid the external interference.

In the case of 3-phase, pass any 2 lead wires of R, S, T into the CT, and connect them with CT1 (13, 14) and CT2 terminals (14, 15). (Fig. 5.3-2)

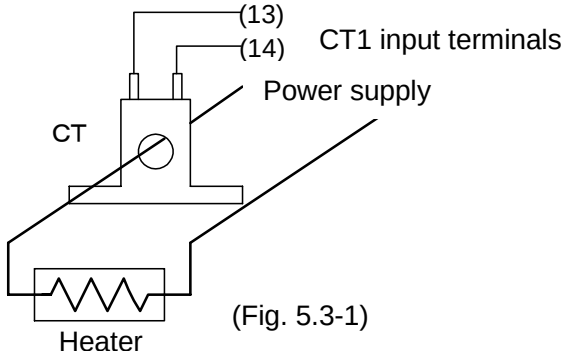

(Fig. 5.3-1)

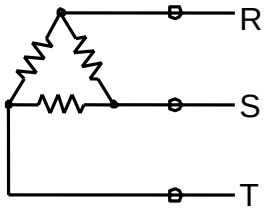

(Fig. 5.3-2)

Pass any 2 wires of R, S and T into CT.

6. Settings

● **Characters used in this manual**

Number	-1	0	1	2	3	4	5	6	7	8	9		
Indication	-1	0	1	2	3	4	5	6	7	8	9		
Alphabet	A	B	C	D	E	F	G	H	I	J	K	L	M
Indication	A	b	C	d	E	F	G	H	I	J	K	L	M
Alphabet	N	O	P	Q	R	S	T	U	V	W	X	Y	Z
Indication	N	o	P	Q	R	S	T	U	V	W	X	Y	Z

6.1 Setting procedures

(1) Setup : Set the Input type, Alarm type, etc. in the Setup mode.
(If the users' specification is the same as the default value of the KT4H/B, it is not necessary to set.)

↓

(2) Main setting mode : Set SV in the Main setting mode.

↓

(3) Sub setting mode : Set PID, A1 value, etc.
(If the users' PID values are the same as the default value of the KT4H/B, it is not necessary to set.)

↓

(4) Auxiliary function setting mode:
Select the lock function, communication conditions (serial communication option), etc.
(If the users' specifications are the same as the default value of the KT4H/B, it is not necessary to set.)

↓

Power ON

↓

Run

6.2 Setup

Setup should occur before using this controller, to set the Input type, Alarm action, Control action, etc. according to the users' conditions.
Default values: Input (K, -200 to 1370℃), Alarm 1 type (No alarm action), Reverse (Heating) action
If the users' specifications are the same as the default value of the KT4H/B, it is not necessary to set up the controller.

6.3 Basic operation of settings

- To proceed to each setting mode, refer to instructions of each mode's section.
- To set or select each setting item, use the △ or ▽ key, then register the value with the MODE key.

6.4 Operation flowchart

This instrument has been classified into the following modes and setting items.

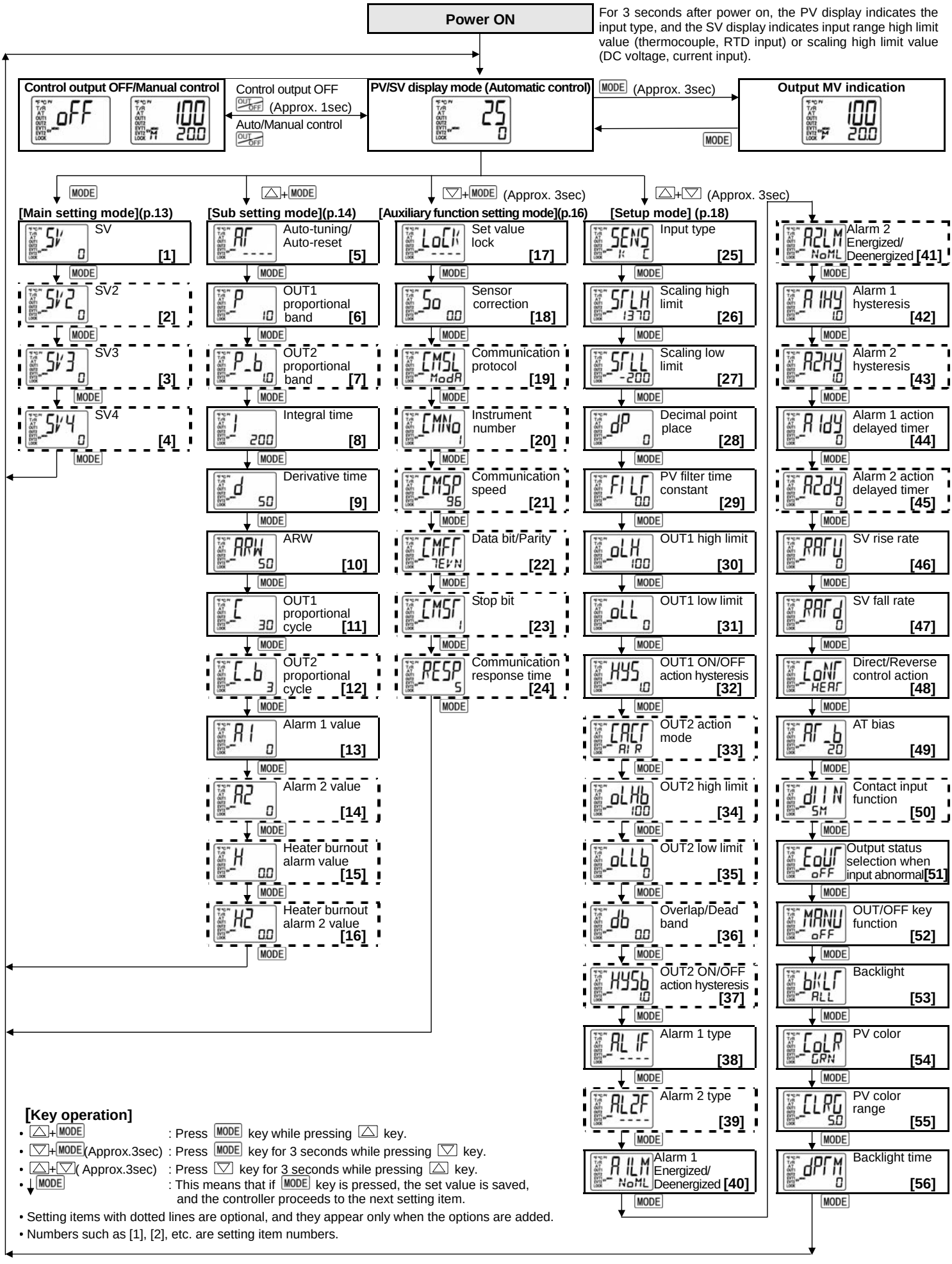

[Key operation]

- + : Press key while pressing key.
- + (Approx.3sec) : Press key for 3 seconds while pressing key.
- + (Approx.3sec) : Press key for 3 seconds while pressing key.
- : This means that if key is pressed, the set value is saved, and the controller proceeds to the next setting item.

• Setting items with dotted lines are optional, and they appear only when the options are added.
• Numbers such as [1], [2], etc. are setting item numbers.

6.5 Main setting mode

To enter the Main setting mode, press MODE key in the PV/SV display mode.
To set or select each setting item, use △ or ▽ key, then register the value with MODE key.
Setting item numbers such as [1], [2], etc. are the same as those on the “6.4 Operation flowchart” (p.12).

Character	Name, Function, Setting range	Default value
[1]	**SV setting** • Sets SV. • Setting range: Scaling low limit to Scaling high limit	0℃
[2]	**SV2 setting** • Sets SV2. Not available if the Contact input option is not applied, if Serial communication option is applied, or if OUT/OFF external selection 2 is selected during Contact input function selection. • Setting range: Scaling low limit to Scaling high limit	0℃
[3]	**SV3 setting** • Sets SV3. Not available if the Contact input option is not applied, if Serial communication option is applied, or if OUT/OFF external selection 1 or 2 is selected during Contact input function selection. • Setting range: Scaling low limit to Scaling high limit	0℃
[4]	**SV4 setting** • Sets SV4. Not available if the Contact input option is not applied, if Serial communication option is applied, or if OUT/OFF external selection 1 or 2 is selected during Contact input function selection. • Setting range: Scaling low limit to Scaling high limit	0℃

6.6 Sub setting mode

To enter the Sub setting mode, press MODE key while pressing △ key in the PV/SV display mode.
To set or select each setting item, use △ or ▽ key, then register the value with MODE key.
Setting item numbers such as [5], [6], etc. are the same as those on the “6.4 Operation flowchart” (p.12).

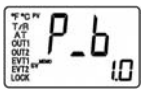

Character	Name, Function, Setting range	Default value
[5]	**Auto-tuning/Auto-reset selection** • Selects Auto-tuning Perform/Cancel (PID) or Auto-reset Perform/Cancel (P, PD action). Not available for ON/OFF and PI actions. • If the auto-tuning is cancelled during the process, P, I and D values revert to the previous values before auto-tuning was performed. • If the auto-tuning is not finished after 4 hours, it is cancelled automatically. • Auto-reset is cancelled in approximately 4 minutes. It cannot be released while performing this function. • - - - - : Auto-tuning/Auto-reset Cancel AT□□/RSET : Auto-tuning/Auto-reset Perform	- - - -
[6]	**OUT1 proportional band setting** • Sets the proportional band for OUT1. OUT1 becomes ON/OFF action when set to 0 or 0.0 • Setting range: 0 to 1000℃ (2000℉), TC or RTD input with a decimal point: 0.0 to 1000.0℃ (℉) DC input: 0.0 to 100.0%	10℃
[7]	**OUT2 proportional band setting** • Sets the proportional band for OUT2. OUT2 becomes ON/OFF action when set to 0.0. Not available if Heating/Cooling control option is not added, or if OUT1 is ON/OFF action. • Setting range: 0.0 to 10.0 times (multiplying factor to OUT1 proportional band)	1.0 times
[8]	**Integral time setting** • Sets integral time for OUT1. Off when set to 0. Not available if OUT1 is ON/OFF action. Auto-reset can be performed when PD is control action (I=0). • Setting range: 0 to 1000 seconds	200 seconds
[9]	**Derivative time setting** • Sets derivative time for OUT1. Off when set to 0. Not available if OUT1 is ON/OFF action. • Setting range: 0 to 300 seconds	50 seconds
[10]	**ARW setting** • Sets ARW (anti-reset windup) for OUT1. Available only when PID is the control action. • Setting range: 0 to 100%	50%
[11]	**OUT1 proportional cycle setting** • Sets proportional cycle for OUT1. For relay contact output, if the proportional cycle time is decreased, the frequency of the relay action increases, and the life of the relay contact is shortened. Not available if OUT1 is ON/OFF action or DC current output type. • Setting range: 1 to 120 seconds	Relay contact: 30sec Non-contact voltage: 3sec
[12]	**OUT2 proportional cycle setting** • Sets proportional cycle for OUT2. For relay contact output, if the proportional cycle time is decreased, the frequency of the relay action increases, and the life of the relay contact is shortened. Not available if Heating/Cooling control option is not applied, or when OUT2 is ON/OFF action. • Setting range: 1 to 120 seconds	Relay contact: 30sec Non-contact voltage: 3sec

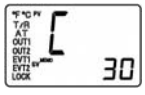

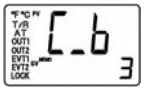

Character	Name, Function, Setting range	Default value
[13]	**Alarm 1 value setting** • Sets action point for Alarm 1 output. Setting the value to 0 or 0.0 disables the function (except Process high and Process low alarm). Not available if No alarm action is selected during Alarm 1 type selection. • Setting range: Refer to (Table 6.6-1).	0℃
[14]	**Alarm 2 value setting** • Sets action point for Alarm 2 output. Setting the value to 0 or 0.0 disables the function (except Process high and Process low alarm). Not available if the Alarm 2 option is not applied, or if No alarm action is selected during Alarm 2 type selection. • Setting range: Refer to (Table 6.6-1).	0℃
[15] 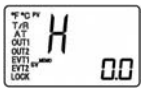 H□□□, □XX.X alternating display	**Heater burnout alarm value setting** • Sets the heater current value for Heater burnout alarm. CT1 current value is indicated on the PV display. When OUT1 is ON, the CT1 current value is updated. When OUT1 is OFF, the KT4H/B memorizes the previous value when OUT1 was ON. Setting to 0.0 disables the alarm. Upon returning to set limits, the alarm will stop. Available only when Heater burnout alarm option (single phase or 3-phase) is added. • Rated current: 20A (0.0 to 20.0A), 50A (0.0 to 50.0A)	0.0A
[16] H2□□, □XX.X alternating display	**Heater burnout alarm 2 value setting** • Sets the heater current value for Heater burnout alarm 2. CT2 current value is indicated on the PV display. When OUT1 is ON, the CT2 current value is updated. When OUT1 is OFF, the KT4H/B memorizes the previous value when OUT1 was ON. Setting to 0.0 disables the alarm. Upon returning to set limits, the alarm will stop. Available only when Heater burnout alarm option (3-phase) is added. • Rated current: 20A (0.0 to 20.0A), 50A (0.0 to 50.0A)	0.0A

(Table 6.6-1)

Alarm type	Setting range
High limit alarm	- (Input span) to input span℃(℉) *1
Low limit alarm	- (Input span) to input span℃(℉) *1
High/Low limits alarm	0 to input span℃(℉) *1
High/Low limit range alarm	0 to input span℃(℉) *1
Process high alarm	Input range low limit value to input range high limit value *2
Process low alarm	Input range low limit value to input range high limit value *2
High limit alarm with standby	- (Input span) to input span℃(℉) *1
Low limit alarm with standby	- (Input span) to input span℃(℉) *1
High/Low limits alarm with standby	0 to input span℃(℉) *1

*1: For DC input, the input span is the same as the scaling span.

*2: For DC input, input range low (or high) limit value is the same as scaling low (or high) limit value.

6.7 Auxiliary function setting mode

To enter the Auxiliary function setting mode, press MODE key for approximately 3 seconds while pressing ▽ key in the PV/SV display mode.

To set or select each setting item, use △ or ▽ key, then register the value with MODE key.

Setting item numbers such as [17], [18], etc. are the same as those on the “6.4 Operation flowchart” (p.12).

Character	Name, Function, Setting range	Default value
[17]	**Set value lock selection** • Locks the set values to prevent setting errors. The setting item to be locked depends on the designation. If Lock 1 or Lock 2 is selected, PID Auto- tuning and Auto-reset cannot be carried out. • ---- (Unlock): All set values can be changed. LoC 1 (Lock 1): None of the set values can be changed. LoC2 (Lock 2): Only main setting mode can be changed. LoC3 (Lock 3): All set values can be changed. However, changed values revert to their previous value after power is turned off because they are not saved in the non-volatile memory. (If the value set by the communication function is the same as the value before the setting, the value will not be written in the non-volatile memory.) **Do not change any setting item in Setup mode. If any item in Setup mode is changed, it will affect other setting items such as the SV and Alarm value.**	Unlock
[18] 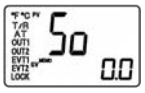	**Sensor correction setting** • Sets the correction value for the sensor. This corrects the input value from the sensor. When a sensor cannot be set at the exact location where control is desired, the sensor measured temperature may deviate from the temperature in the controlled location. When controlling with plural controllers, sometimes the measured temperatures (input value) do not concur with the same set value due to difference in sensor accuracy or dispersion of load capacities. In such a case, the control can be set at the desired temperature by adjusting the input value of sensors. PV= Current PV+ Sensor correction value • Setting range: -100.0 to 100.0℃ (℉), DC voltage, current input: -1000 to 1000 (The placement of the decimal point follows the selection.)	0.0℃
[19] 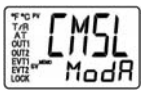	**Communication protocol selection** • Selects the communication protocol. Not available if the Serial communication option is not added, or if Contact input option is added. • ModA : Modbus ASCII mode ModR : Modbus RTU mode MEWT : MEWTOCOL (slave)	Modbus ASCII mode
[20]	**Instrument number setting** • Sets the instrument number individually to each instrument when communicating by connecting plural instruments. Not available if Serial communication option is not added or if Contact input option is added. • Setting range: 1 to 99	1
[21]	**Communication speed selection** • Selects a communication speed equal to that of the host computer. Not available if Serial communication option is not added or if the Contact input option is added. • 24 : 2400bps 48 : 4800bps 96 : 9600bps 192 : 19200bps	9600bps

Character	Name, Function, Setting range	Default value
[22]	**Data bit/Parity selection** • Selects the data bit and parity. Not available if the Serial communication option is not added or if Contact input option is added. • 8NoN : 8 bits/No parity 7NoN : 7 bits/No parity 8EVN : 8 bits/Even parity 7EVN : 7 bits/Even parity 8odd : 8 bits/Odd parity 7odd : 7 bits/Odd parity	7 bits/Even parity
[23]	**Stop bit selection** • Selects the stop bit. Not available if Serial communication option is not added or if Contact input option is added. • 1 : 1 2 : 2	1
[24]	**Communication response time setting** • Sets the minimum response time of communication. Not available if Serial communication option is not added or if Contact input option is added. • Setting range: 5 to 99ms	5ms

6.8 Setup mode

To enter the Setup mode, press ▽ key while pressing △ key for approximately 3 seconds in the PV/SV display mode.

To set or select each setting item, use △ or ▽ key, then register the value with MODE key.

Setting item numbers such as [25], [26], etc. are the same as those on the “6.4 Operation flowchart” (p.12).

Character	Name, Function, Setting range	Default value
[25]	**Input type selection** • The input type can be selected from a choice of; thermocouple (10 types), RTD (2 types), DC current (2 types) and DC voltage (4 types), and the unit ℃/℉ can be selected as well. • When changing the input from DC voltage to other inputs, remove the sensor connected to this controller first, then change for the input. • **(+) side input terminal number of 0 to 5V DC, 1 to 5V DC, 0 to 10V DC differs from that of 0 to 1V DC.** **(+) side input terminal number of 0 to 5V DC, 1 to 5V DC, 0 to 10V DC: 9** **(+) side input terminal number of 0 to 1V DC: 10**	K (-200 to 1370℃)

K℃	K	-200 to	1370	℃	K℉	K	-320 to	2500	℉
K .℃	K	-200.0 to	400.0	℃	K℉	K	-320.0 to	750.0	℉
J℃	J	-200 to	1000	℃	J℉	J	-320 to	1800	℉
R℃	R	0 to	1760	℃	R℉	R	0 to	3200	℉
S℃	S	0 to	1760	℃	S℉	S	0 to	3200	℉
b℃	B	0 to	1820	℃	b℉	B	0 to	3300	℉
E℃	E	-200 to	800	℃	E℉	E	-320 to	1500	℉
T .℃	T	-200.0 to	400.0	℃	T .℉	T	-320.0 to	750.0	℉
N℃	N	-200 to	1300	℃	N℉	N	-320 to	2300	℉
PL2℃	PL-Ⅱ	0 to	1390	℃	PL2℉	PL-Ⅱ	0 to	2500	℉
C℃	C(W/Re5-26)	0 to	2315	℃	C℉	C(W/Re5-26)	0 to	4200	℉
Pt .℃	Pt100	-200.0 to	850.0	℃	Pt .℉	Pt100	-320.0 to	1500.0	℉
JPt.℃	JPt100	-200.0 to	500.0	℃	JPt.℉	JPt100	-320.0 to	900.0	℉
Pt℃	Pt100	-200 to	850	℃	Pt℉	Pt100	-320 to	1500	℉
JPt℃	JPt100	-200 to	500	℃	JPt℉	JPt100	-320 to	900	℉
4-20A	4 to 20mA DC	-2000 to	10000						
0-20A	0 to 20mA DC	-2000 to	10000						
0-1V	0 to 1V DC	-2000 to	10000						
0-5V	0 to 5V DC	-2000 to	10000						
1-5V	1 to 5V DC	-2000 to	10000						
0-10V	0 to 10V DC	-2000 to	10000						

[26]	**Scaling high limit setting** • Sets scaling high limit value. • Setting range: Scaling low limit value to input range high limit value DC voltage, current input: -2000 to 10000 (The placement of the decimal point follows the selection.)	1370℃
[27]	**Scaling low limit setting** • Sets scaling low limit value. • Setting range: Input range low limit value to Scaling high limit value DC voltage, current input: -2000 to 10000 (The placement of the decimal point follows the selection.)	-200℃
[28] 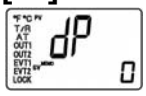	**Decimal point place selection** • Selects decimal point place. Available only for DC input. • □□□0 : No decimal point □□.00 : 1 digit after the decimal point □0.000 : 2 digits after the decimal point 0.0000 : 3 digits after the decimal point	No decimal point

Character	Name, Function, Setting range	Default value
[29]	**PV filter time constant setting** • Sets PV filter time constant. If the value is set too large, it affects control result due to the delay of response. • Setting range: 0.0 to 10.0 seconds	0.0 seconds
[30]	**OUT1 high limit setting** • Sets the high limit value of OUT1. Not available if OUT1 is ON/OFF action. • Setting range: OUT1 low limit value to 100% (DC current output type: OUT1 low limit value to 105%)	100%
[31]	**OUT1 low limit setting** • Sets the low limit value of OUT1. Not available if OUT1 is ON/OFF action. • Setting range: 0% to OUT1 high limit value (DC current output type: -5% to OUT1 high limit value)	0%
[32]	**OUT1 ON/OFF action hysteresis setting** • Sets ON/OFF action hysteresis for OUT1. Available only when OUT1 is ON/OFF action. • Setting range: 0.1 to 100.0℃ (℉), DC voltage, current input: 1 to 1000 (The placement of the decimal point follows the selection.)	1.0℃
[33]	**OUT2 action mode selection** • Selects OUT2 action from air, oil and water cooling. Not available if the Heating/Cooling control option is not added or if OUT2 is ON/OFF action. • AIR Air cooling (linear characteristic) oIL Oil cooling (1.5th power of the linear characteristic) WAT Water cooling (2nd power of the linear characteristic) 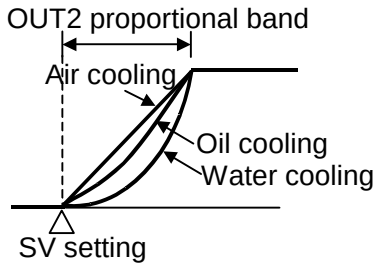 (Fig. 6.8-1)	Air cooling
[34]	**OUT2 high limit setting** • Sets the high limit value of OUT2. Not available if Heating/Cooling control option is not added, or if OUT2 is ON/OFF action. • Setting range: OUT2 low limit value to 100%	100%
[35]	**OUT2 low limit setting** • Sets the low limit value of OUT2. Not available if Heating/Cooling control option is not added or if OUT2 is ON/OFF action. • Setting range: 0% to OUT2 high limit value	0%
[36]	**Overlap band/Dead band setting** • Sets the overlap band or dead band for OUT1 and OUT2. +Set value: Dead band, -Set value: Overlap band Available only when the Heating/Cooling control option is added. • Setting range: -100.0 to 100.0℃ (℉) DC voltage, current input: -1000 to 1000 (The placement of the decimal point follows the selection.)	0.0℃
[37]	**OUT2 ON/OFF action hysteresis setting** • Sets ON/OFF action hysteresis for OUT2. Available only when Heating/Cooling control option is added and when OUT2 is ON/OFF action. • Setting range: 0.1 to 100.0℃ (℉) DC voltage, current input: 1 to 1000 (The placement of the decimal point follows the selection.)	1.0℃

Character	Name, Function, Setting range	Default value
[38]	**Alarm 1 type selection** • Selects an action type for Alarm 1. (Refer to Section “11.4 Alarm action” on p.30.) • ----: No alarm action H□□□: High limit alarm L□□□: Low limit alarm HL□□: High/Low limits alarm WI d□: High/Low limit range alarm RS□□: Process high alarm RRS□: Process low alarm H□□W: High limit alarm with standby L□□W: Low limit alarm with standby HL□W: High/Low limits alarm with standby	No alarm action
[39]	**Alarm 2 type selection** • Selects an action type for Alarm 2. (Refer to Section “11.4 Alarm action” on p.30.) Available only when Alarm 2 option is added. • Selection items are the same as those of Alarm 1 type selection.	No alarm action
[40]	**Alarm 1 Energized/Deenergized selection** • Selects Energized/Deenergized status for Alarm 1. (Refer to “Alarm Energized/Deenergized” on p. 22.) Not available if No alarm action is selected during Alarm 1 type selection. • NoML: Energized REVS: Deenergized	Energized
[41]	**Alarm 2 Energized/Deenergized selection** • Selects Energized/Deenergized status for Alarm 2. (Refer to “Alarm Energized/Deenergized” on p.22.) Not available if Alarm 2 option is not added or if No alarm action is selected during Alarm 2 type selection. • Selection items are the same as those of Alarm 1 Energized/Deenergized selection.	Energized
[42]	**Alarm 1 hysteresis setting** • Sets hysteresis for Alarm 1. Not available if No alarm action is selected during Alarm 1 type selection. • Setting range: 0.1 to 100.0℃ (℉) DC voltage, current input: 1 to 1000 (The placement of the decimal point follows the selection.)	1.0℃
[43]	**Alarm 2 hysteresis setting** • Sets hysteresis for Alarm 2. Not available if Alarm 2 option is not added or if No alarm action is selected during Alarm 2 type selection. • Setting range: 0.1 to 100.0℃ (℉) DC voltage, current input: 1 to1000 (The placement of the decimal point follows the selection.)	1.0℃
[44]	**Alarm 1 action delayed timer setting** • Sets Alarm 1 action delayed timer. When setting time has elapsed after the input enters the alarm output range, the alarm is activated. Not available if No alarm action is selected during Alarm 1 type selection. • Setting range: 0 to 10000 seconds	0 seconds
[45]	**Alarm 2 action delayed timer setting** • Sets Alarm 2 action delayed timer. When setting time has elapsed after the input enters the alarm output range, the alarm is activated. Not available if Alarm 2 option is not added or if No alarm action is selected during Alarm 2 type selection. • Setting range: 0 to 10000 seconds	0 seconds

Character	Name, Function, Setting range	Default value
[46]	**SV rise rate setting** • Sets SV rise rate (rising value for 1 minute). Setting to 0 disables the function. • Setting range: 0 to 10000℃/min. (℉/min.) Thermocouple, RTD input with a decimal point: 0.0 to 1000.0℃/min. (℉/min.) DC voltage, current input: 0 to 10000/min. (The placement of the decimal point follows the selection.)	0℃/minute
[47]	**SV fall rate setting** • Sets SV fall rate (falling value for 1 minute). Setting to 0 disables the function. • Setting range: 0 to 10000℃/min. (℉/min.) Thermocouple, RTD input with a decimal point: 0.0 to 1000.0℃/min. (℉/min.) DC voltage, current input: 0 to 10000/min. (The placement of the decimal point follows the selection.)	0℃/minute
[48]	**Direct/ Reverse control action selection** • Selects either Reverse (Heating) or Direct (Cooling) control action. • HEAT : Reverse (Heating) action CooL : Direct (Cooling) action	Reverse (Heating) control action
[49] 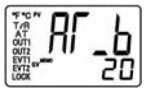	**AT bias setting** • Sets bias value during PID auto-tuning. Not available for DC voltage and current input • Setting range: 0 to 50℃ (0 to 100℉) Thermocouple, RTD input with a decimal point: 0.0 to 50.0℃ (0.0 to 100.0℉)	20℃
[50]	**Contact input function selection** • Contact input terminals DI2 can be used for a Set value memory external selection or for an OUT/OFF external selection. (Refer to “Contact input function” on p.22.) If Auto/Manual function is selected during OUT/OFF key function selection, externally Auto/Manual control can be switched. Available only when the Contact input option is added. • SM□□: Set value memory external selection oUT□: OUT/OFF external selection 1 (SV and SV2 can be switched.) oUT2 : OUT/OFF external selection 2	Set value memory external selection
[51]	**Output status selection when input abnormal** • Selects whether OUT1 (or OUT2) is turned OFF or not when DC input is overscale or underscale. Available only for DC current output type with DC input. • OFF□ : Outputs OFF(4mA) or OUT1(OUT2) low limit. ON□: Outputs a value between OFF (4mA) and ON (20mA) or between OUT1 (OUT2) low limit value and OUT1 (OUT2) high limit value depending on deviation.	Output OFF
[52]	**OUT/OFF key function selection** • Selects whether OUT/OFF key is used for control output OUT/OFF function or for Auto/Manual control function. • OFF□ : OUT/OFF function MANU : Auto/Manual control function	OUT/OFF function
[53]	**Backlight selection** • Selects the display and indicators to backlight. • ALL□: All are backlit. PV□□: Only PV display is backlit. SV□□: Only SV display is backlit. AC□□: Only action indicators are backlit. PVSV: PV and SV displays are backlit. PVAC: PV display and Action indicators are backlit. SVAC: SV display and Action indicators are backlit.	All are backlit

Character	Name, Function, Setting range	Default value
[54]	**PV color selection** • Selects PV display color. (Refer to Section “8.4 Changing PV color” on p.26.) • GRN□: Green RED□: Red ORG□: Orange ALGR: When Alarm 1 or Alarm 2 is ON, PV color turns from green to red. ALOR: When Alarm 1 or Alarm 2 is ON, PV color turns from orange to red. PVGR: PV color changes continuously (Orange → Green → Red). APGR: PV color changes continuously (Orange → Green → Red), and at the same time Alarm 1 or Alarm 2 is ON (Red).	Green
[55]	**PV color range setting** • When PVGR (PV color changes continuously) or APGR (PV color changes continuously, and at the same time Alarm 1 or Alarm 2 is ON; Red) is selected during PV color selection, the value of green PV color range can be set. • Setting range: 0.1 to 100.0℃(℉) DC voltage, current input: 1 to 1000 (The placement of the decimal point follows the selection.)	5.0℃
[56]	**Backlight time setting** • Sets time to backlight from no operation status until backlight is switched off. When set to 0, the backlight remains ON. Backlight relights by pressing any key while backlight is OFF. • Setting range: 0 to 99 minutes	0 minutes

[Alarm Energized/Deenergized]

When [Alarm Energized] is selected, the alarm output (between terminals 3–4, or 5–6) is conductive (ON) while EVT1 (or EVT2) is lit. The alarm output is not conductive (OFF) while EVT1 (or EVT2) is not lit.

When [Alarm Deenergized] is selected, the alarm output (between terminals 3–4, or 5–6) is not conductive (OFF) while EVT1 (or EVT2) is lit. The alarm output is conductive (ON) while EVT1 (or EVT2) is not lit.

High limit alarm (when Energized is set)

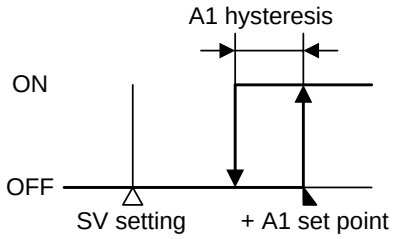

(Fig. 6.8-2)

High limit alarm (when Deenergized is set)

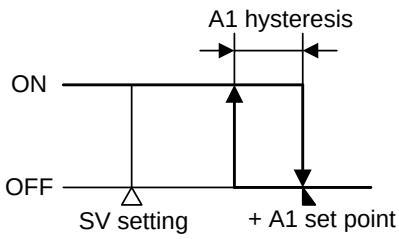

(Fig. 6.8-3)

“A1” means Alarm 1.

[Contact input function] Actions depend on OUT/OFF key function selection.

When OUT/OFF function ([52] OFF□ in the Setup mode) is selected

Connecting terminal number		Contact input function: [50] in the Setup mode		
Between 17-18 (DI1-COM)	Between 16-18 (DI2-COM)	Set value memory external selection (SM□)	OUT/OFF external selection 1 (OUT□)	OUT/OFF external selection 2 (OUT2)
Open	Open	SV	SV	SV
Closed	Open	SV2	SV2	
Open	Closed	SV3	Control output OFF	Control output OFF
Closed	Closed	SV4		

When Auto/Manual control function ([52] MANU in the Setup mode) is selected

Connecting terminal number		Contact input function: [50] in the Setup mode		
Between 17-18 (DI1-COM)	Between 16-18 (DI2-COM)	Set value memory external selection (SM□)	OUT/OFF external selection 1 (OUT□)	OUT/OFF external selection 2 (OUT2)
Open	Open	SV	SV (Automatic control)	SV (Automatic control)
Closed	Open	SV2	SV2 (Automatic control)	
Open	Closed	SV3	Manual control	Manual control
Closed	Closed	SV4		

7. Operation

7.1 Starting operation

After the unit is mounted to the control panel and wiring is completed, operate the unit following the procedures below.

(1) Turn the power supply to the KT4H ON.

After the power is turned on, the PV display indicates the input type, and the SV display indicates the input range high limit value (for thermocouple, RTD input) or scaling high limit value (for DC input) for approximately 3 seconds. See (Table 7-1) below.

During this time, all outputs and the indicators are in OFF status.

Control will then start indicating the PV (process variable) on the PV display and SV (set value) on the SV display.

While control output OFF function is working, PV display indicates oFF□.

(Table 7-1)

Sensor input	℃		℉	
	PV display	SV display	PV display	SV display
K	K□□C	1370	K□□F	2500
	K□ .C	400.0	K□ .F	750.0
J	J□□C	1000	J□□F	1800
R	R□□C	1760	R□□F	3200
S	S□□C	1760	S□□F	3200
B	b□□C	1820	b□□F	3300
E	E□□C	□800	E□□F	1500
T	T□ .C	400.0	T□ .F	750.0
N	N□□C	1300	N□□F	2300
PL-Ⅱ	PL2C	1390	PL2F	2500
C(W/Re5-26)	C□□C	2315	C□□F	4200
Pt100	Pt .C	850.0	Pt .F	1500.0
	Pt□C	□850	Pt□F	1500
JPt100	JPt.C	500.0	JPt.F	900.0
	JPtC	□500	JPtF	□900
4 to 20mA DC	420A	Scaling high limit		
0 to 20mA DC	020A			
0 to 1V DC	0□ 1V			
0 to 5V DC	0□5V			
1 to 5V DC	1□5V			
0 to 10V DC	0 10V			

(2) Input each set value.

Input each set value. Refer to Chapter “6. Settings”.

(3) Turn the load circuit power ON.

Control action starts so as to keep the control target at the SV (set value).

7.2 Control output OFF function (Control output OUT/OFF function)

This is a function to pause the control action or turn the control output of the unused instrument of the plural units OFF even if the power to the instrument is supplied.

To turn the control output OFF, press OUT/OFF key for approximately 1 second in the PV/SV display mode.

[oFF□] is indicated on the PV display while the function is working.

Once the control output OFF function is enabled, the function cannot be released even if the power to the instrument is turned OFF and ON again.

To cancel the function, press OUT/OFF key again for approx. 1 second.

7.3 Auto/Manual control switching

Select Auto/Manual control function during [52] OUT/OFF key function selection in the Setup mode.

By pressing OUT/OFF key in the PV/SV display mode, Auto/Manual control function can be switched.

If control action is switched from automatic to manual or vice versa, balance/bumpless function works to prevent a sudden change in manipulated variables.

When automatic control is switched to manual control, the MEMO display indicates [M].

The output MV (manipulated variable) can be increased or decreased by pressing △ or ▽ key to perform the control.

By pressing OUT/OFF key again, the unit reverts to the PV/SV display mode (automatic control).

Whenever the power to the KT4H is turned on, automatic control starts.

7.4 Indicating output MV (manipulated variable)

To indicate output MV (manipulated variable), press MODE key for approx. 3 seconds in the PV/SV display mode. The MEMO display indicates [M].

By pressing MODE key again, the unit reverts to the PV/SV display mode.

7.5 Auto-tuning/Auto-reset Perform/Cancel

Auto-tuning/Auto-reset Perform/Cancel can be conducted in “[5] Auto-tuning/Auto-reset selection” in the Sub setting mode.

How to perform Auto-tuning/Auto-reset

(1) Press MODE key while pressing △ key in the PV/SV display mode.
The unit proceeds to the Sub setting mode, and [5] Auto-tuning/Auto-reset selection item appears.

(2) Select Auto-tuning/Auto-reset “Perform: AT□□YRSET” with △ key, and press MODE key.
Auto-tuning/Auto-reset will initiate.
While performing Auto-tuning/Auto-reset, the AT indicator is flashing.
If Auto-tuning is not finished after 4 hours, it is automatically shut down.
Auto-reset is cancelled in approximately 4 minutes. It cannot be released while performing this function.

How to cancel Auto-tuning/Auto-reset

(1) Press MODE key while pressing △ key in the PV/SV display mode.
The unit proceeds to Sub setting mode, and [5] Auto-tuning/Auto-reset selection item appears.

(2) Select Auto-tuning/Auto-reset “Cancel: ----” with ▽ key, and press MODE key.
Auto-tuning will stop.
If Auto-tuning is cancelled during this process, each value of P, I, D, ARW returns to the previous values before the Auto-tuning was performed.
Auto-reset is cancelled in approximately 4 minutes. It cannot be released while performing this function.

8. Basic usage

8.1 ON/OFF control

In ON/OFF control action, the control output is turned ON when PV is lower than SV, and turned OFF when PV exceeds SV. Overshoot, undershoot and hunting phenomenon occur during ON/OFF action. Therefore, ON/OFF action is not suitable for control which requires accuracy.

(1) Press MODE key while pressing △ key in the PV/SV display mode.
The unit proceeds to the Sub setting mode, and [5] Auto-tuning/Auto-reset selection item appears.
(2) Press MODE key. [6] OUT1 proportional band setting item appears.
(3) Set the OUT1 proportional band to "0" with ▽ key.
(4) Press MODE key several times to revert to the PV/SV display mode.
(5) In the PV/SV display mode, press ▽ key for approximately 3 seconds while pressing △ key.
The unit proceeds to the Setup mode, and Input type selection item appears.
(6) Press MODE key several times until [32] OUT1 ON/OFF action hysteresis setting item appears.
(7) Set [32] OUT1 ON/OFF action hysteresis value, user specifies, with △ or ▽ key.
(8) Press MODE key several times to revert to the PV/SV display mode.
ON/OFF control action starts so as to keep the control target at the SV.
(9) For the ON/OFF control action, refer to Section "11.2 OUT1 ON/OFF action" (p.29).

8.2 PID control

PID control combines the P, I and D control actions described below.
The "P" action suppresses overshoot and hunting phenomenon, the "I" action eliminates offset, and the "D" action reduces rapid input changes occurring due to external disturbances.

P (Proportional band)

Proportional action is the action in which the control output varies in proportion to the deviation between the set value and the processing temperature.
If the proportional band is narrowed, even if the output changes by a slight variation of the processing temperature, better control results can be obtained as the offset decreases.
However, if the proportional band is narrowed too much, even slight disturbances may cause variation in the processing temperature, control action changes to ON/OFF action and the so-called hunting phenomenon occurs.
Therefore, when the processing temperature comes to a balanced position near the set value and a constant temperature is maintained, the most suitable value can be selected by gradually narrowing the proportional band while observing the control results.

I (Integral time)

Integral action is used to eliminate offset. When the integral time is shortened, the returning speed to the set point is accelerated. However, the cycle of oscillation is also accelerated and the control becomes unstable.

D (Derivative time)

Derivative action is used to restore the change in the processing temperature according to the rate of change. It reduces the amplitude of overshoot and undershoot width.
If the derivative time is shortened, the restoring value becomes small, and if the derivative time is extended, an excessive returning phenomenon may occur and the control system may oscillate.

ARW (Anti-reset windup)

ARW prevents overshoot caused by the integral action when PID control begins.

(1) Perform Auto-tuning. Refer to "7.5 Auto-tuning/Auto-reset Perform/Cancel"(p.24) and "10.Auto-tuning" (p.28).
(2) After Auto-tuning is completed, PID control starts so as to keep the control target at the SV.
(3) For the PID control action, refer to Section "11.1 OUT1 PID, PI, PD, P actions" (p.29).

8.3 How to use the Alarm output

(1) In the PV/SV display mode, press ▽ key for approximately 3 seconds while pressing △ key.
The unit proceeds to the Setup mode, and Input type selection item appears.
(2) Press MODE key several times until Alarm 1 (or Alarm 2) type selection item appears.
(3) Select [38] Alarm 1 (or [39] Alarm 2) type with △ or ▽ key.
(4) Select or set [40] Alarm 1 (or [41] Alarm 2) Energized/Deenergized, [42] Alarm 1 (or [43] Alarm 2) hysteresis, and [44] Alarm 1 (or [45] Alarm 2) action delayed timer.
(5) Press MODE key several times to revert to the PV/SV display mode.
(6) In the PV/SV display mode, press MODE key while pressing △ key.
The unit proceeds to the Sub setting mode, and Auto-tuning/Auto-reset selection item appears.
(7) Press MODE key until [13] Alarm 1 (or [14] Alarm 2) value setting item appears.
(8) Set [13] Alarm 1 (or [14] Alarm 2) set point with △ or ▽ key.
(9) Press MODE key several times to revert to the PV/SV display mode.
(10) For Alarm actions, refer to Section "11.4 Alarm action" (p.30).

8.4 Changing PV color

(1) In the PV/SV display mode, press ▽ key for approximately 3 seconds while pressing △ key. The unit proceeds to the Setup mode, and the Input type selection item appears.
(2) Press MODE key several times until [54] PV color selection item appears.
(3) Select the PV color with △ or ▽ key. (Table 8.4-1)
(4) If "PV color changes continuously (PVCR or APCR)" is selected during [54] PV color selection, set the value of [55] PV color range. (Fig. 8.4-1) (Fig. 8.4-2)
(5) Press MODE key several times to revert to the PV/SV display mode.

(Table 8.4-1)

Setting	Function	PV color
GRN	Green	Constantly green
Red	Red	Constantly red
oRG	Orange	Constantly orange
ALCR	When Alarm 1 or Alarm 2 is ON: Green → Red	When alarm OFF: Green When Alarm 1 or Alarm 2 is ON, the PV color turns from green to red.
ALoR	When Alarm 1 or Alarm 2 is ON: Orange → Red	When alarm OFF: Orange When Alarm 1 or Alarm 2 is ON, the PV color turns from orange to red.
PVCR	PV color changes continuously (Orange → Green → Red)	PV color changes depending on color range setting (CLRG). • PV is lower than [SV-PV color range]: Orange • PV is within [SV±PV color range]: Green • PV is higher than [SV+PV color range]: Red 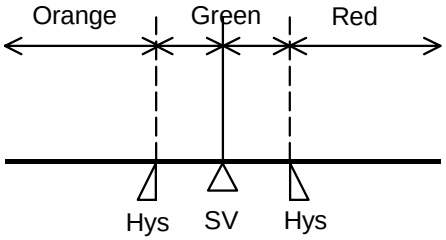 Hys: Set point of PV color range (Fig. 8.4-1)
APCR	PV color changes continuously (Orange → Green → Red), and at the same time Alarm 1 or Alarm 2 is ON (Red).	PV color changes depending on color range setting (CLRG). When Alarm 1 or Alarm 2 is on, PV display turns red. • PV is lower than [SV-PV color range]: Orange • PV is within [SV±PV color range]: Green • PV is higher than [SV+PV color range]: Red • Alarm1 or Alarm 2 is ON: Red 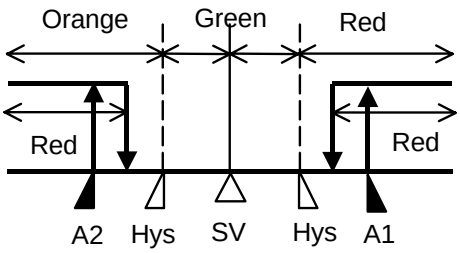 Hys: Set point of PV color range A1: Alarm 1 set point (in the case of High limit alarm) A2: Alarm 2 set point (in the case of Low limit alarm) (Fig. 8.4-2)

9. Auto-reset and ARW

9.1 Auto-reset

Auto-reset is performed to correct the offset at the point at which PV indication is stabilized within the proportional band during the PD action.

Since the corrected value is internally memorized, it is not necessary to perform the auto-reset again as long as the process is the same.

However, when the OUT1 proportional band (P) is set to 0 or 0.0, the corrected value is cleared.

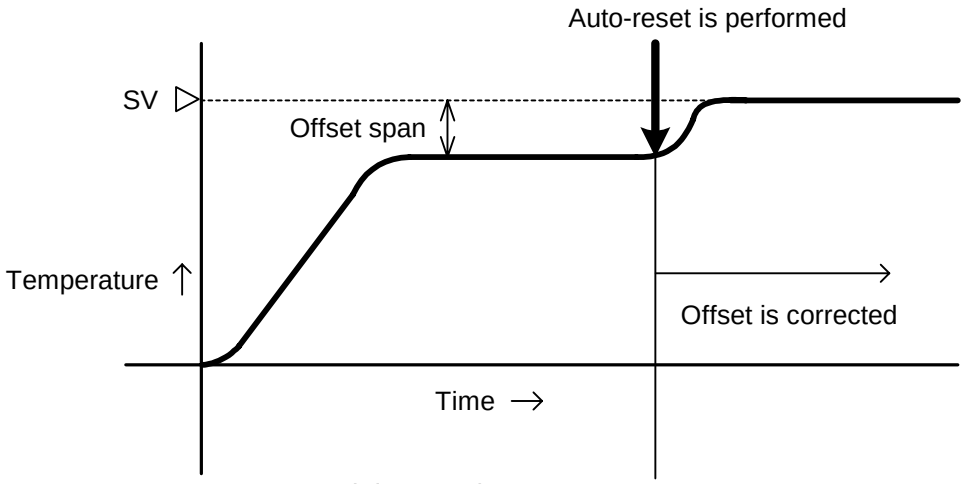

(Fig. 9.1-1)

9.2 ARW (Anti-reset windup)

When PID control action is rising, overshoot may occur due to excessive integral (I) action.

ARW is the function for reducing the overshoot on start-up.

The smaller the ARW value, the fewer cases of overshoot (undershoot) caused by the integral action at the point where the PV reaches the SV. However, it takes time until stabilization.

10. Auto-tuning

In order to set each value of P, I, D and ARW automatically, the auto-tuning process should be made to fluctuate to obtain an optimal value. One of 3 types of fluctuation below is automatically selected. For DC input, the auto-tuning process will fluctuate around the SV for conditions of [1], [2] and [3] below.

⚠ Notice

- **Perform the PID auto-tuning during the trial run.**
- **During the PID auto-tuning, none of the setting items can be set.**
- **If power failure occurs during the PID auto-tuning, the tuning stops.**
- **Sometimes the auto-tuning process will not fluctuate if auto-tuning is performed at or near room temperature. Therefore auto-tuning might not finish normally.**

[1] In the case of a large difference between the SV and processing temperature as the temperature is rising

When AT bias is set to 20℃, the AT process will fluctuate at the temperature 20℃ lower than the SV.

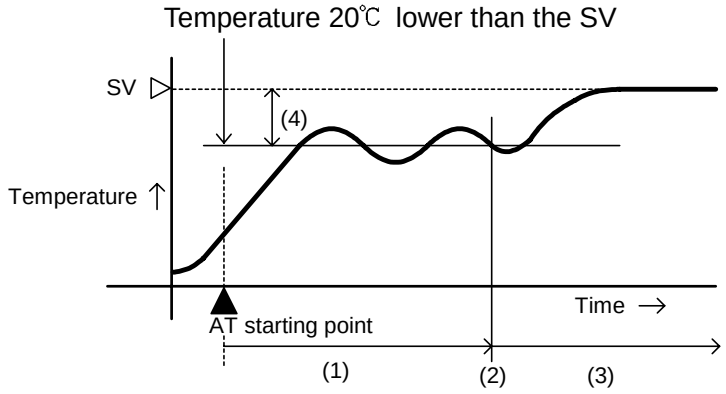

(Fig. 10-1)

(1) Calculating PID constant
(2) PID constant calculated
(3) Controlled by the PID constant set by auto-tuning.
(4) AT bias value

[2] When the control is stable or when control temperature is within ±20℃ of the SV

The AT process will fluctuate around the SV.

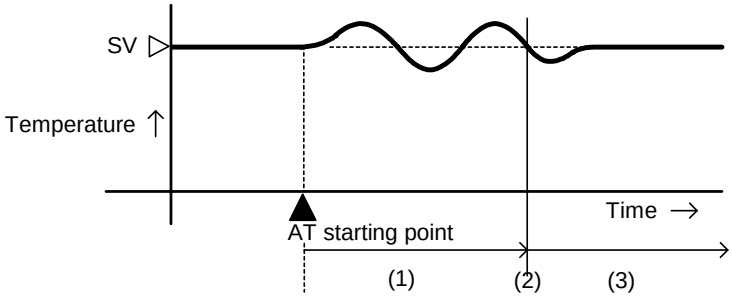

(Fig. 10-2)

(1) Calculating PID constant
(2) PID constant calculated
(3) Controlled by the PID constant set by auto-tuning.

[3] In the case of a large difference between the SV and processing temperature as the temperature is falling

When AT bias is set to 20℃, the AT process will fluctuate at the temperature 20℃ higher than the SV.

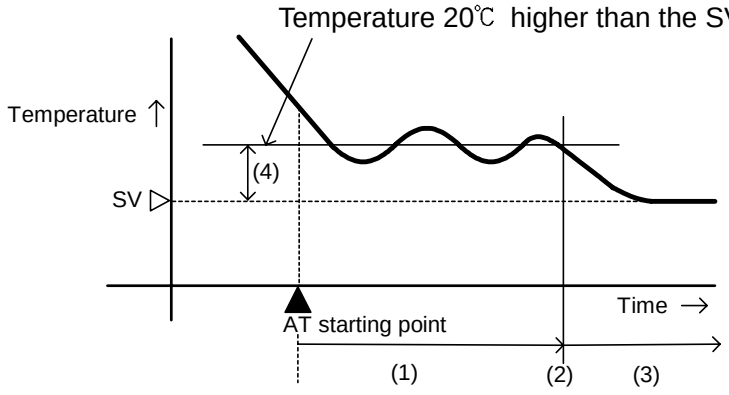

(Fig. 10-3)

(1) Calculating PID constant
(2) PID constant calculated
(3) Controlled by the PID constant set by auto-tuning.
(4) AT bias value

11. Action explanation

11.1 OUT1 PID, PI, PD, P actions

PI action : When derivative time is set to “0”
PD action: When integral time is set to “0”
P action : When both integral and derivative time are set to “0”
[8] Integral time and [9] Derivative time can be set in the Sub setting mode. (p.14)
[48] Direct (Cooling)/Reverse (Heating) action can be selected in the Setup mode. (p.21)

	Reverse (Heating) action	Direct (Cooling) action
Control action	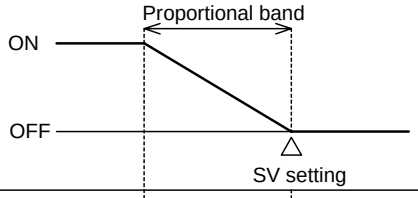	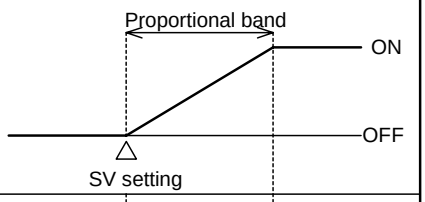
Relay contact output	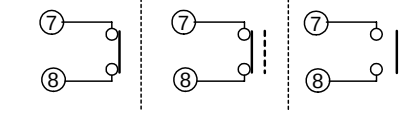 Cycle action is performed according to deviation	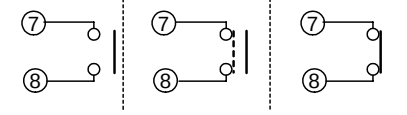 Cycle action is performed according to deviation
Non-contact voltage output	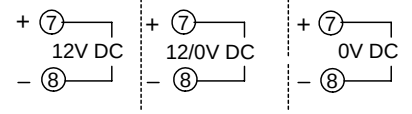 Cycle action is performed according to deviation	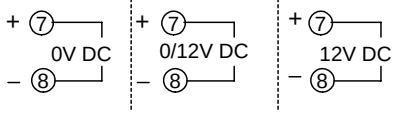 Cycle action is performed according to deviation
DC current output	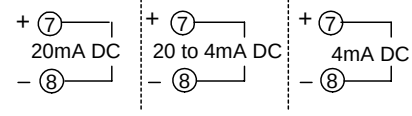 Changes continuously according to deviation	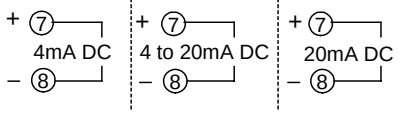 Changes continuously according to deviation
Indicator (OUT1) Green	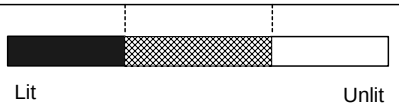	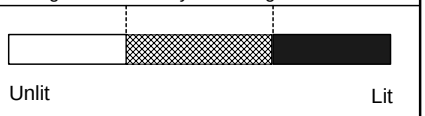

▨ part : Acts ON or OFF.

11.2 OUT1 ON/OFF action

ON/OFF action: When OUT1 proportional band is set to “0” or “0.0”
[6] OUT1 proportional band can be set in the Sub setting mode. (p.14)
[48] Direct (Cooling)/Reverse (Heating) action can be selected in the Setup mode. (p.21)

	Reverse (Heating) action	Direct (Cooling) action
Control action	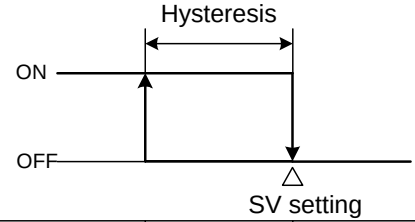	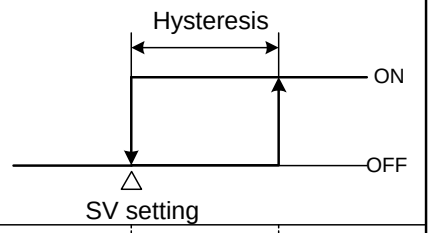
Relay contact output	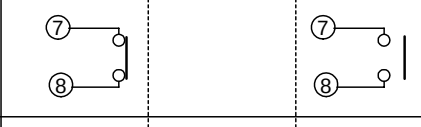	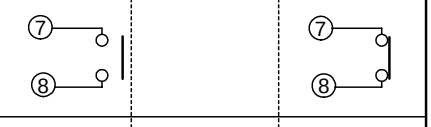
Non-contact voltage output		
DC current output		
Indicator (OUT1) Green	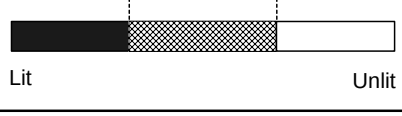	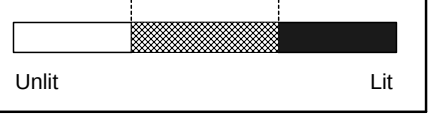

▨ part: Acts ON or OFF.

11.3 Heater burnout alarm action

[15] Heater burnout alarm value and [16] Heater burnout alarm 2 value can be set in the Sub setting mode. (p.15)

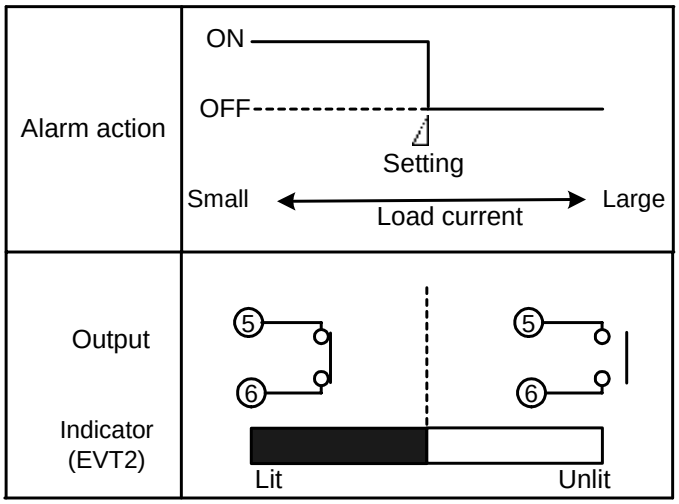

If Heater burnout alarm, Heater burnout alarm 2 and Alarm 2 are added together, they (EVT2) utilize common output terminals.

11.4 Alarm action

[38] Alarm 1 type and [39] Alarm 2 type can be selected in the Setup mode. (p.20)

[42] Alarm 1 hysteresis and [43] Alarm 2 hysteresis can be set in the Setup mode. (p.20)

[13] Alarm 1 value and [14] Alarm 2 value can be set in the Sub setting mode. (p.15)

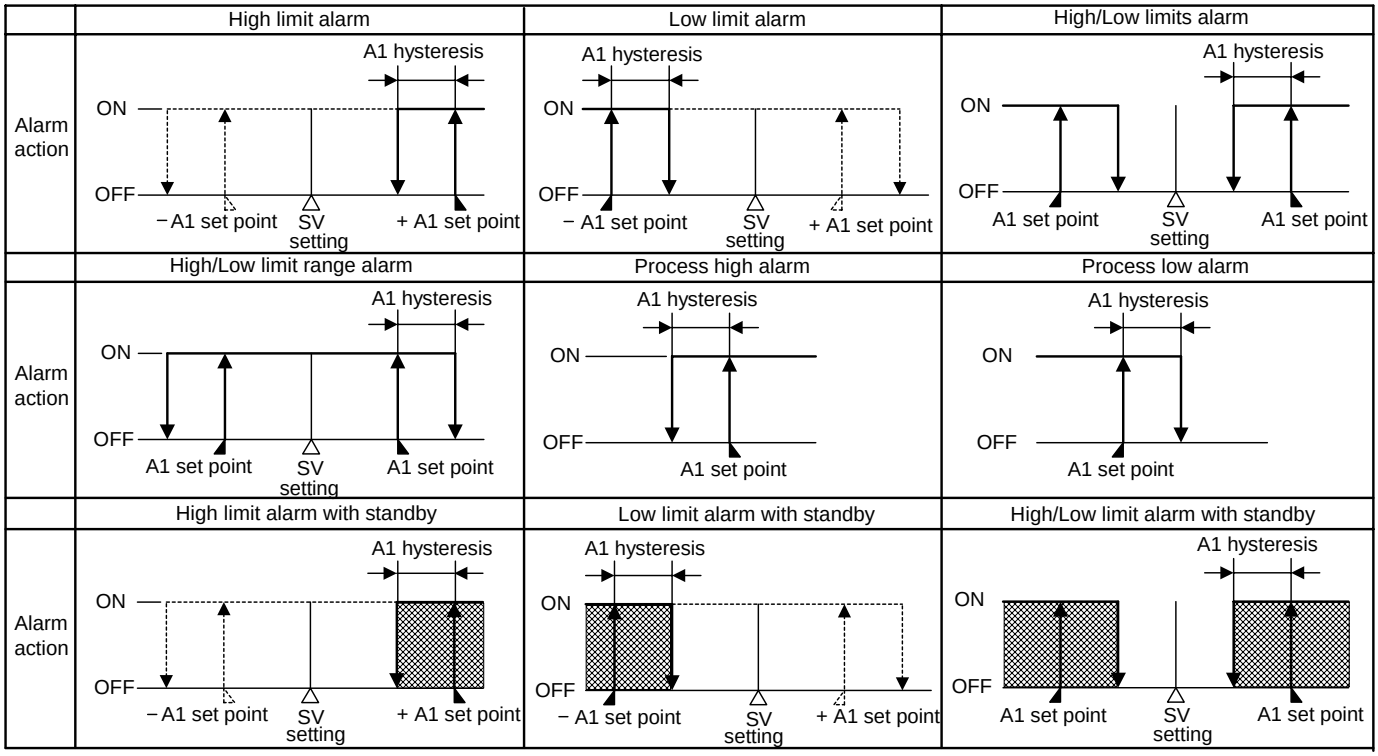

: Standby functions in this section.

Alarm standby function

When the power supply to the instrument is turned on, even if the input enters the alarm action range, the alarm is not activated.

Even if the alarm action point enters the alarm action range due to the SV being changed while the controller is running, the alarm is not activated, either.

Once the input exceeds the alarm action point, the standby function is released, ensuring the controller continues to run.

"A1" means Alarm 1. For Alarm 2, read "A2" for "A1".

EVT1 indicator is for Alarm 1, and EVT2 indicator is for Alarm 2.

EVT1 indicator lights up when output terminals 3 and 4 are connected, and goes off when they are disconnected.

EVT2 indicator lights up when output terminals 5 and 6 are connected, and goes off when they are disconnected.

11.5 OUT2 (Heating/Cooling control) action [Reverse (Heating) action]

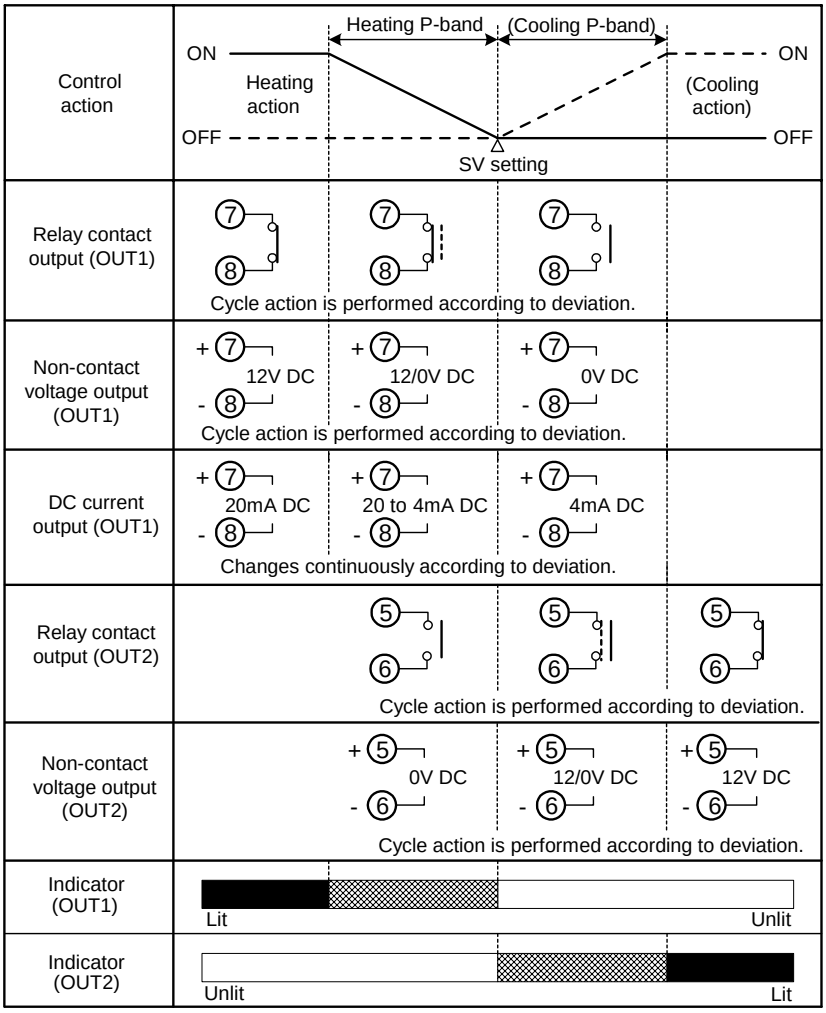

Heating/Cooling control can be used by adding Heating/Cooling control option.

Heating proportional band can be set during [6] OUT1 proportional band setting, and cooling proportional band can be set during [7] OUT2 proportional band setting in the Sub setting mode. (p.14)

[48] Direct/Reverse control can be set in the Setup mode. (p.21)

: Acts ON (lit) or OFF (unlit).
: Represents Heating control action.
: Represents Cooling control action.

11.6 OUT2 (Heating/Cooling control) action [Reverse (Heating) action] (When setting dead band)

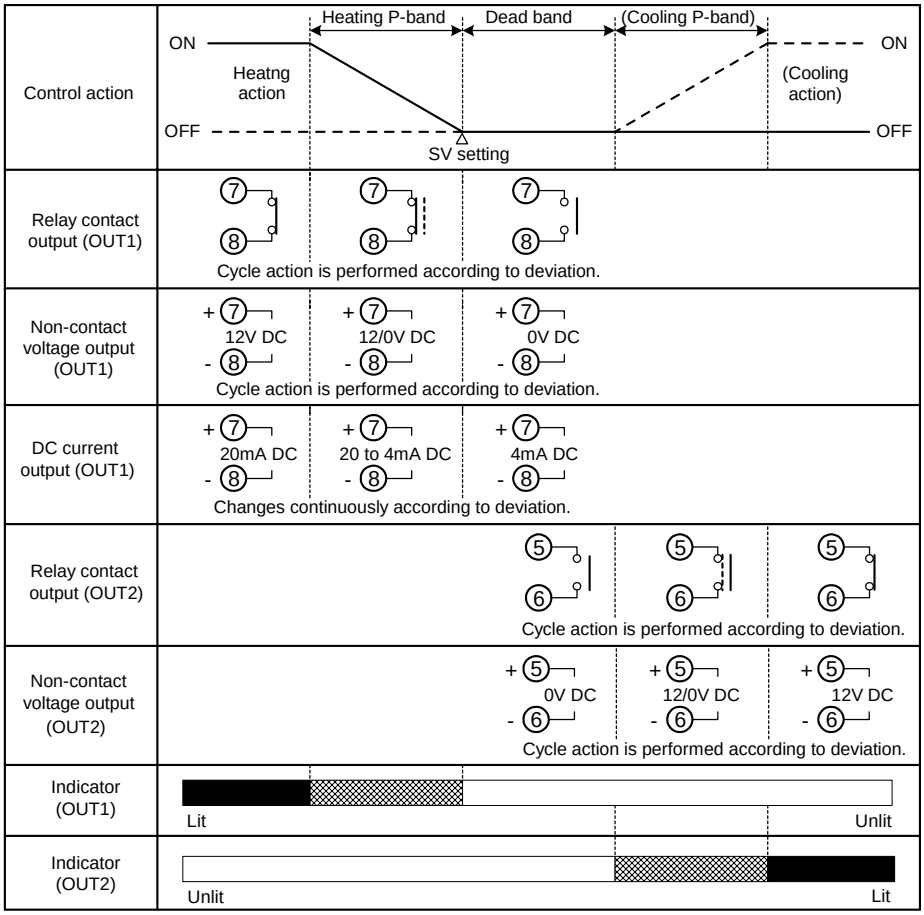

Heating/Cooling control can be used by adding Heating/ Cooling control option.

Heating proportional band can be set during [6] OUT1 proportional band setting, and cooling proportional band can be set during [7] OUT2 proportional band setting in the Sub setting mode. (p.14)

Dead band can be set during [36] Overlap band/Dead band setting in the Setup mode.(p.19)

[48] Direct/Reverse control can be set in the Setup mode. (p.21)

: Acts ON (lit) or OFF (unlit).
: Represents Heating control action.
: Represents Cooling control action.

11.7 OUT2 (Heating/Cooling control) action [Reverse (Heating) action] (When setting overlap band)

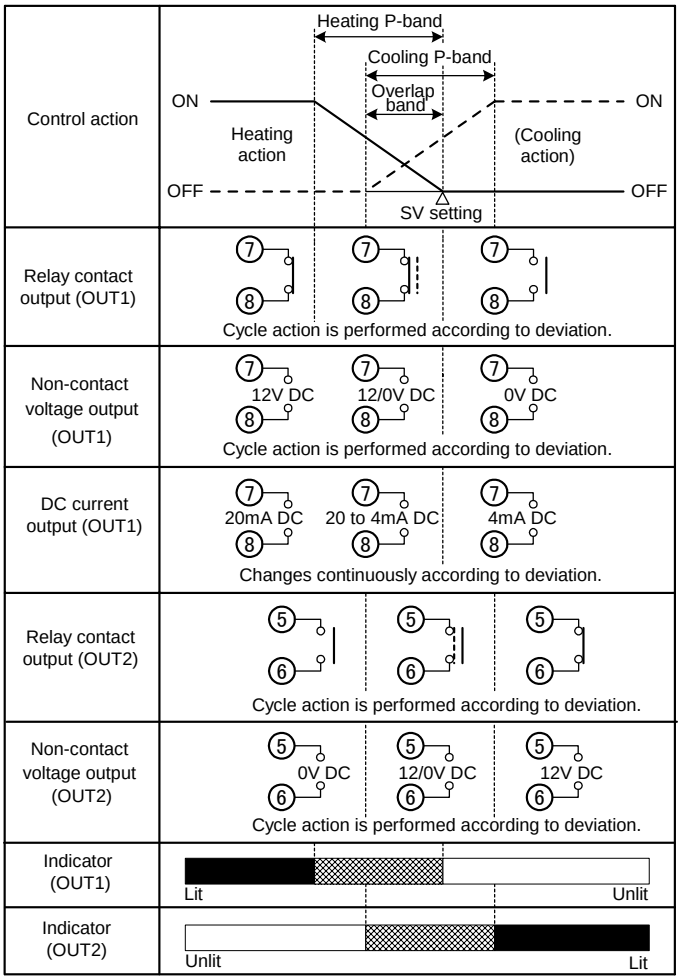

Heating/Cooling control can be used by adding Heating/Cooling control option.

Heating proportional band can be set during [6] OUT1 proportional band setting, and cooling proportional band can be set during [7] OUT2 proportional band setting in the Sub setting mode. (p.14)

Overlap band can be set during [36] Overlap band/Dead band setting in the Setup mode.(p.19)

[48] Direct/Reverse control can be set in the Setup mode. (p.21)

: Acts ON (lit) or OFF (unlit).
——— : Represents Heating control action.
------- : Represents Cooling control action.

11.8 OUT2 (Heating/Cooling control) action [Direct (Cooling) action]

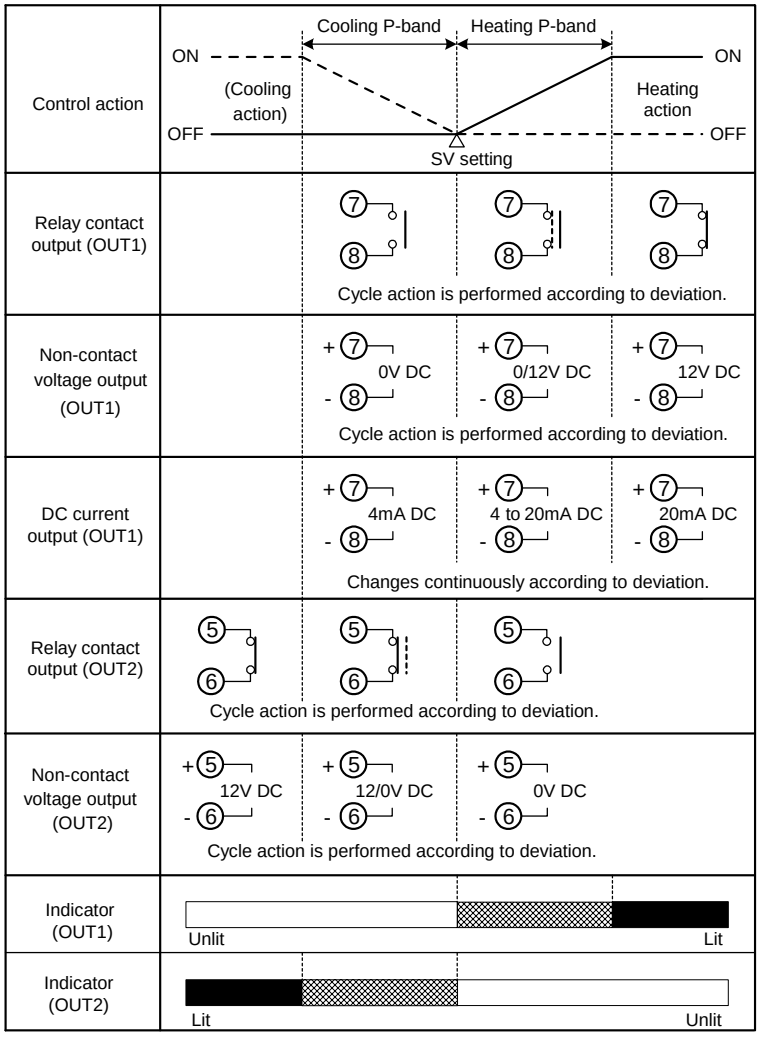

Heating/Cooling control can be used by adding Heating/Cooling control option.

Heating proportional band can be set during [6] OUT1 proportional band setting, and cooling proportional band can be set during [7] OUT2 proportional band setting in the Sub setting mode. (p.14)

[48] Direct/Reverse control can be set in the Setup mode. (p.21)

: Acts ON (lit) or OFF (unlit).
——— : Represents Heating control action.
------- : Represents Cooling control action.

11.9 OUT2 (Heating/Cooling control) action [Direct (Cooling) action] (When setting dead band)

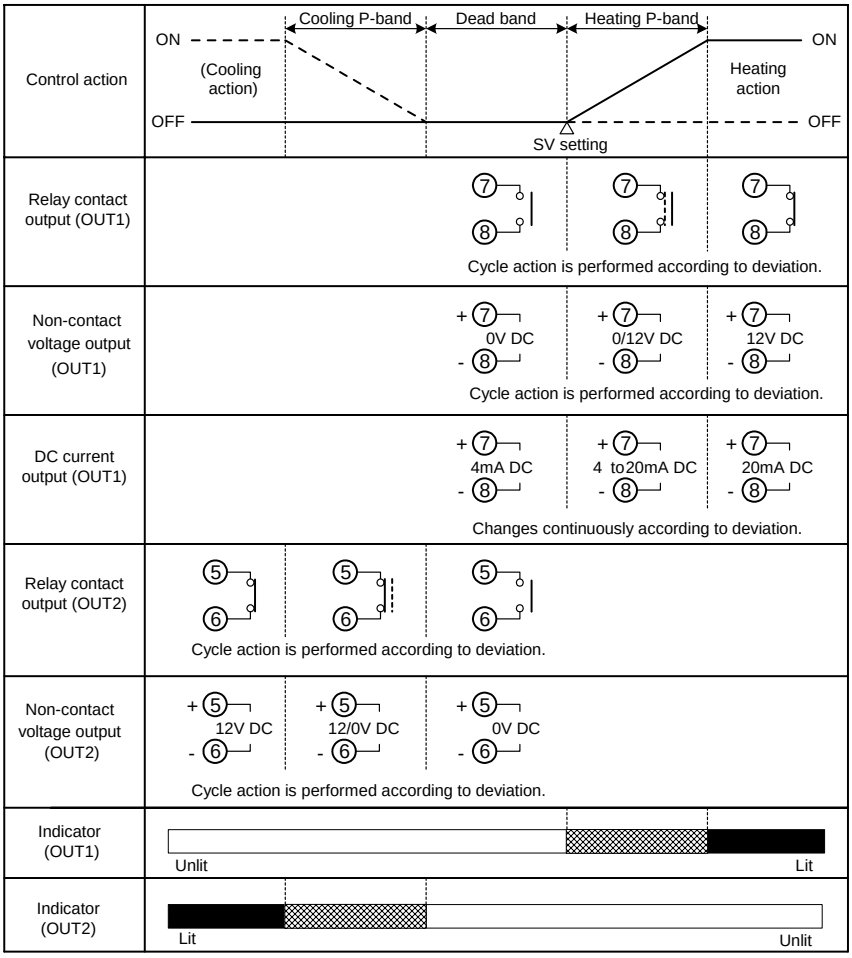

Heating/Cooling control can be used by adding Heating/Cooling control option.

Heating proportional band can be set during [6] OUT1 proportional band setting, and cooling proportional band can be set during [7] OUT2 proportional band setting in the Sub setting mode. (p.14)

Dead band can be set during [36] Overlap band/Dead band setting in the Setup mode. (p.19)

[48] Direct/Reverse control can be set in the Setup mode. (p.21)

: Acts ON (lit) or OFF (unlit).
———— : Represents Heating control action.
- - - - - - - : Represents Cooling control action.

11.10 OUT2 (Heating/Cooling control) action [Direct (Cooling) action] (When setting overlap band)

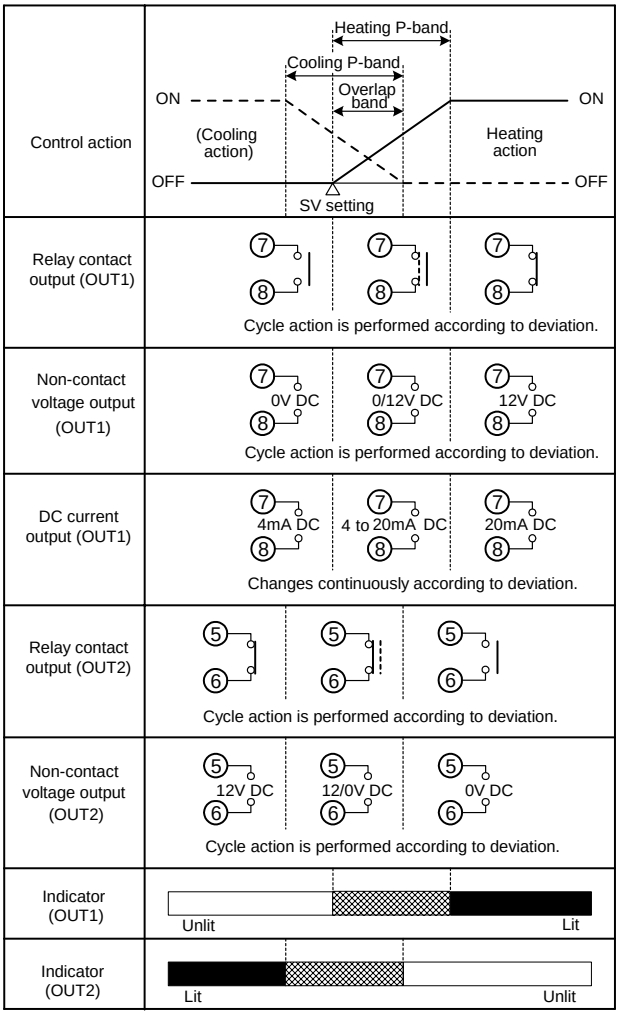

Heating/Cooling control can be used by adding Heating/Cooling control option.

Heating proportional band can be set during [6] OUT1 proportional band setting, and cooling proportional band can be set during [7] OUT2 proportional band setting in the Sub setting mode. (p.14)

Overlap band can be set during [36] Overlap band/Dead band setting in the Setup mode. (p.19)

[48] Direct/Reverse control can be set in the Setup mode. (p.21)

: Acts ON (lit) or OFF (unlit).
———— : Represents Heating control action.
- - - - - - - : Represents Cooling control action.

11.11 SV rise rate, SV fall rate setting action

[46] SV rise rate and [47] SV fall rate can be set in the Setup mode. (p.21)

When the SV is adjusted, it approaches the new SV by the preset SV rise rate or SV fall rate.

When SV is adjusted while SV is rising (or falling), SV at the given time becomes a starting point, and approaches the new SV.

When power is turned on, from PV the SV approaches the new SV.

SV can be changed with keypad operation, Serial communication function and Set value memory external selection function.

Not available when set to 0℃/Min (0/Min).

(e.g.) When changing SV from 200℃ ⟶ 300℃ ⟶ 240℃

[When SV rise rate and SV fall rate are set to 0℃/Min]

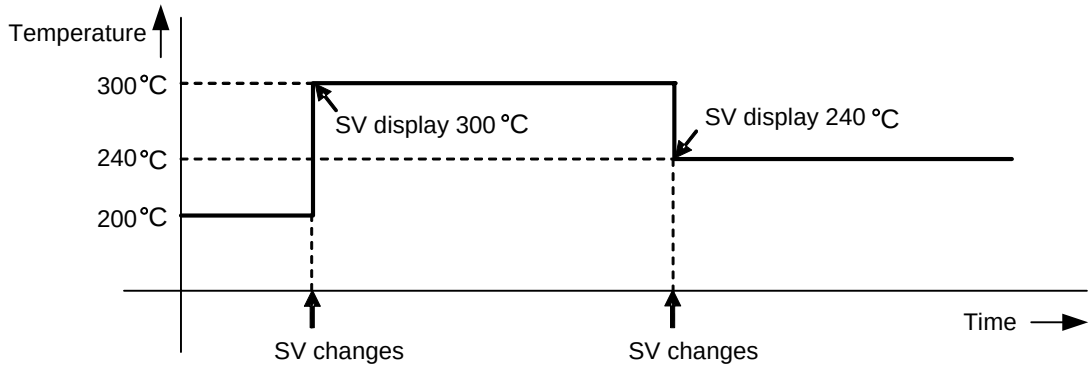

[When SV rise rate is set to 60℃/Min, and SV fall rate is set to 0℃/Min]

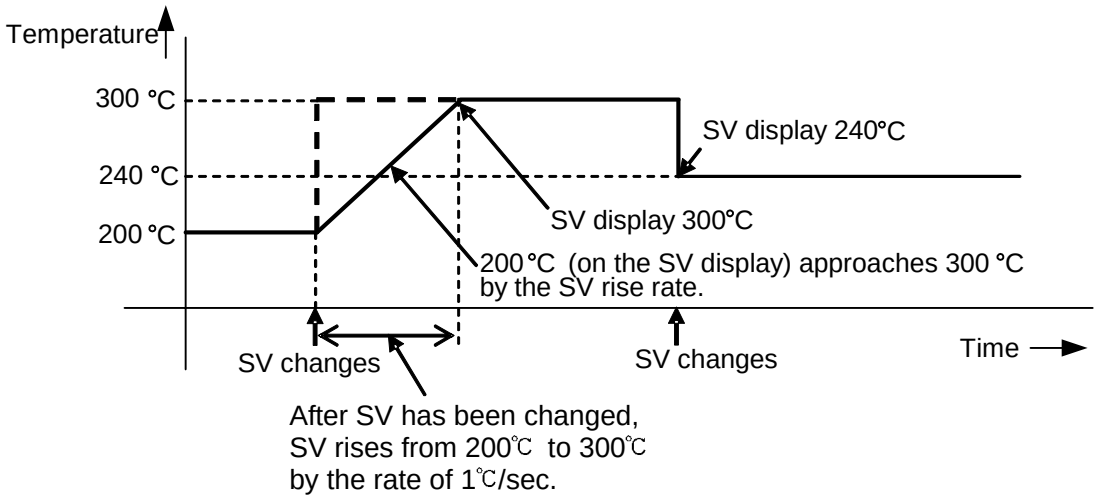

[When SV rise rate is set to 60℃/Min, and SV fall rate are set to 30℃/Min]

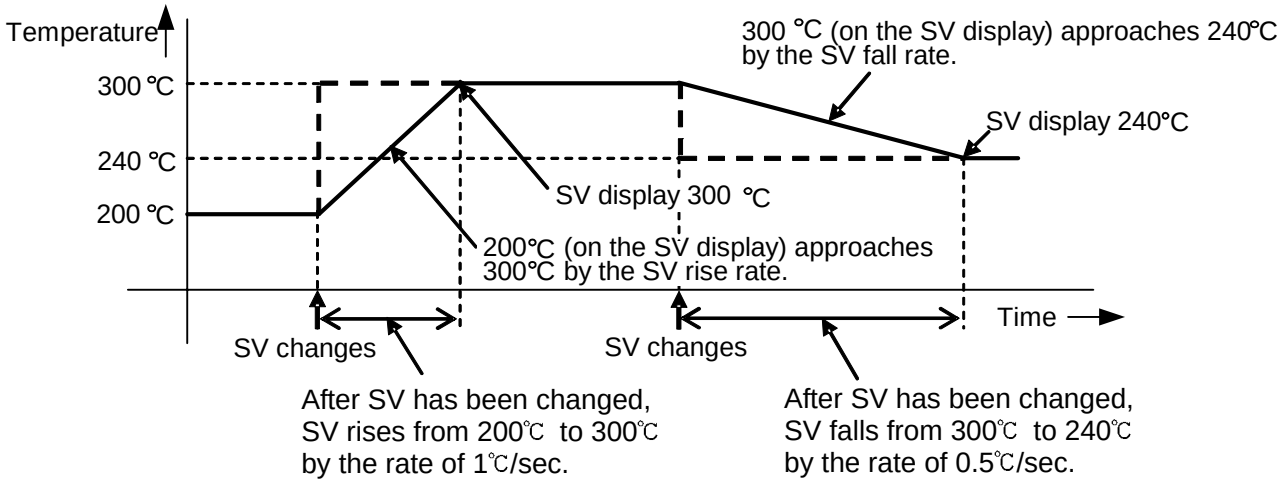

When power is turned on or when control output OFF function is cancelled by the OUT/OFF key, SV changes as follows in relation to PV.

(e.g.) SV=200℃, SV rise rate=60℃/Min, SV fall rate=30℃/Min

[When SV>PV]

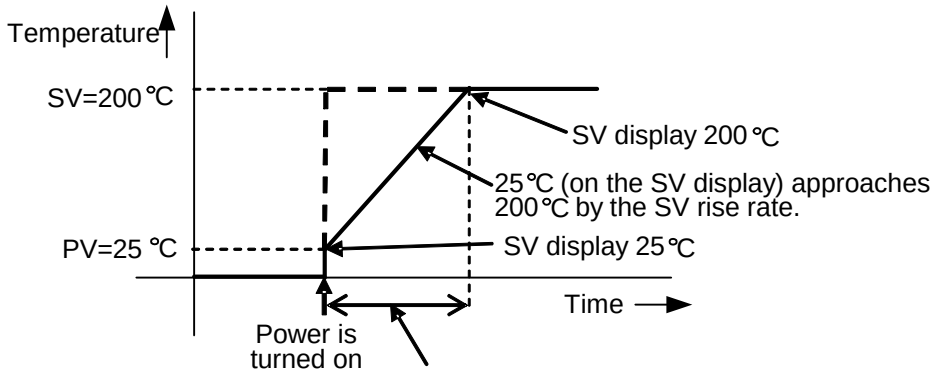

In the case of SV>PV, when power is turned on, or when control output OFF function is cancelled by the OUT/OFF key, the SV rise rate setting works, and SV rises from 25℃ to 200℃ by the rate of 1℃/sec.

(Fig. 11.11-4)

[When SV≦PV]

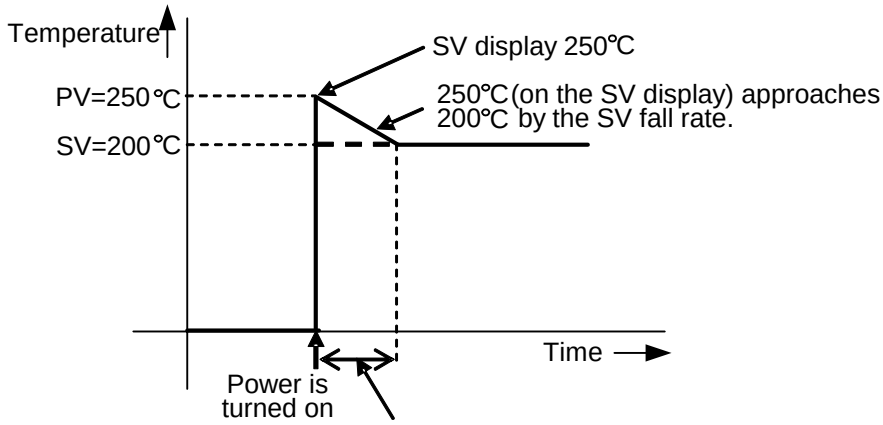

In the case of SV≦PV, when power is turned on, or when control output OFF function is cancelled by the OUT/OFF key, the SV fall rate setting works, and SV falls from 250℃ to 200℃ by the rate of 0.5℃/sec.

(Fig. 11.11-5)

12. Communication

Serial communication and Tool port communication cannot be used together.
When performing Serial communication, remove the tool cable (AKT4H820) from the USB port of the PC and tool connector of the KT4H/B.
When performing Tool port communication, it is not required to remove the Serial communication cables. However, do not send a command from the master side.

12.1 System configuration

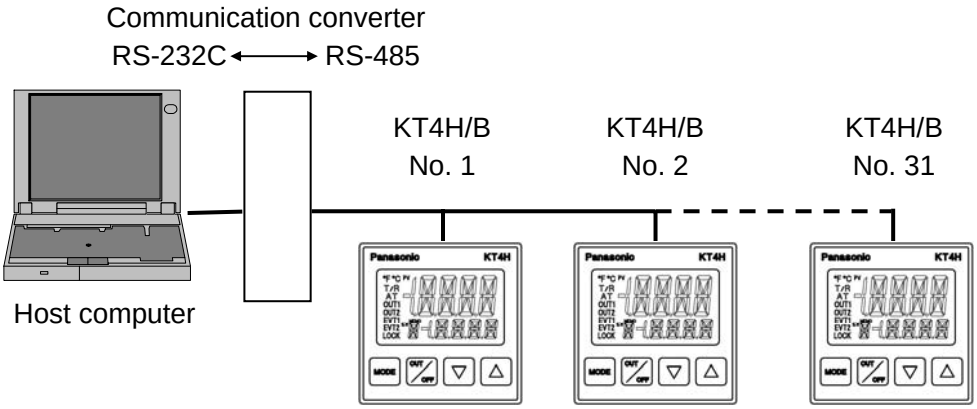

(Fig. 12.1-1)

12.2 Wiring

Wiring example using a communication converter

When using D-sub 9-pin connector

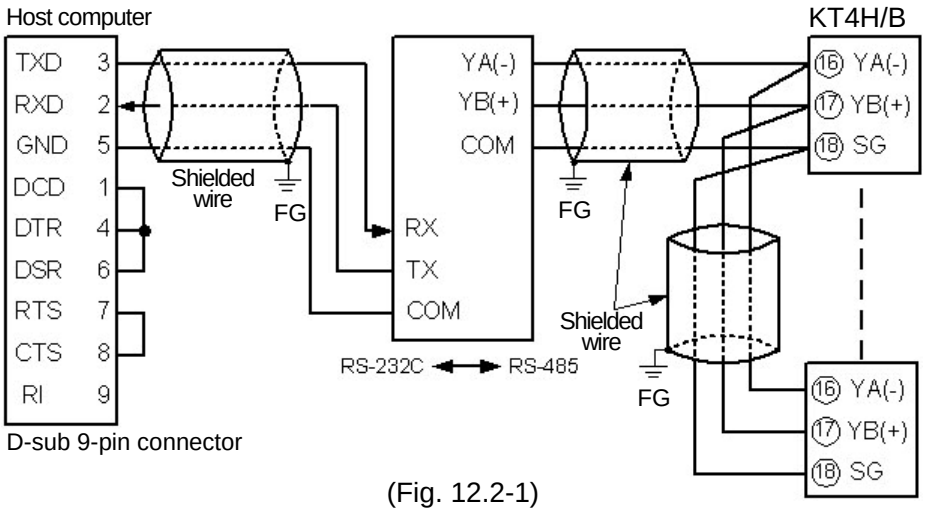

(Fig. 12.2-1)

When using D-sub 25-pin connector

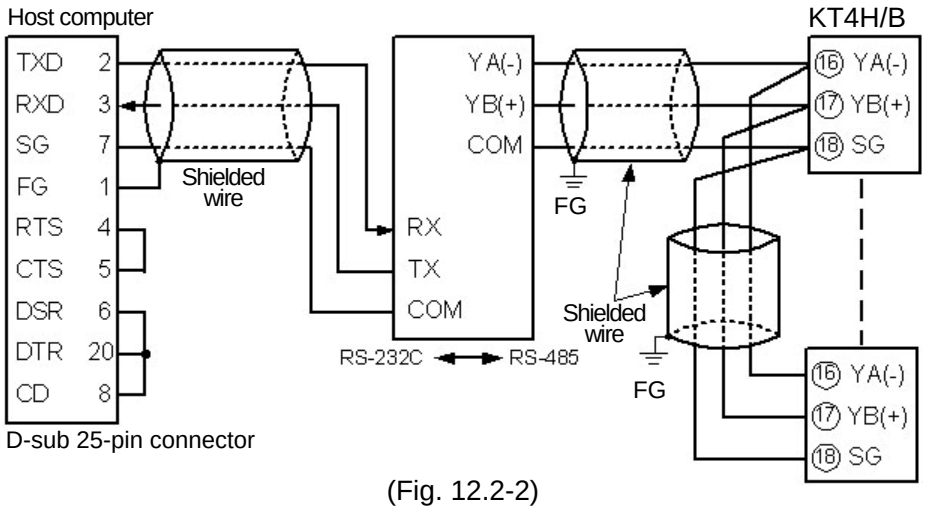

(Fig. 12.2-2)

When connecting to a PLC (RS-485)

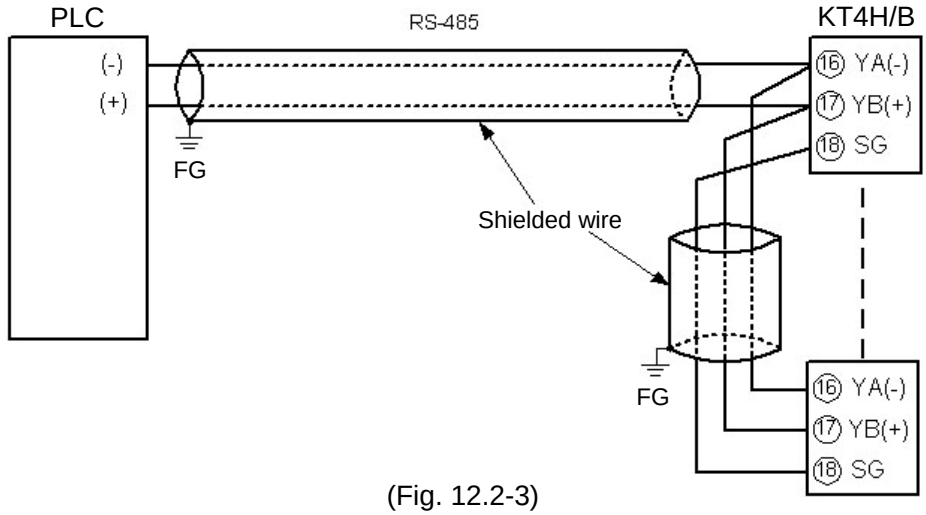

(Fig. 12.2-3)

Shielded wire

Connect only one side of the shielded wire to the FG terminal so that current cannot flow to the shielded wire. If both sides of the shielded wire are connected to the FG terminal, the circuit will be closed between the shielded wire and the ground. As a result, current will run through the shielded wire and this may cause noise.

Be sure to ground the FG terminal.

Terminator (Terminal resistor)

Do not connect a terminator with the communication line because each KT4H/B has built-in pull-up and pull-down resistors instead of a terminator.

Even though a terminator is not necessary for communication between the PLC and KT4H/B, if a terminator is required due to signal reflection, connect the terminator on the PLC side.

Connect a terminator of 120Ω or more resistance.

12.3 Communication parameter setting

Set each parameter following the procedures below.

Setting item numbers such as [17, [19], etc. are the same as those on the “6.4 Operation flowchart”. (p.12)

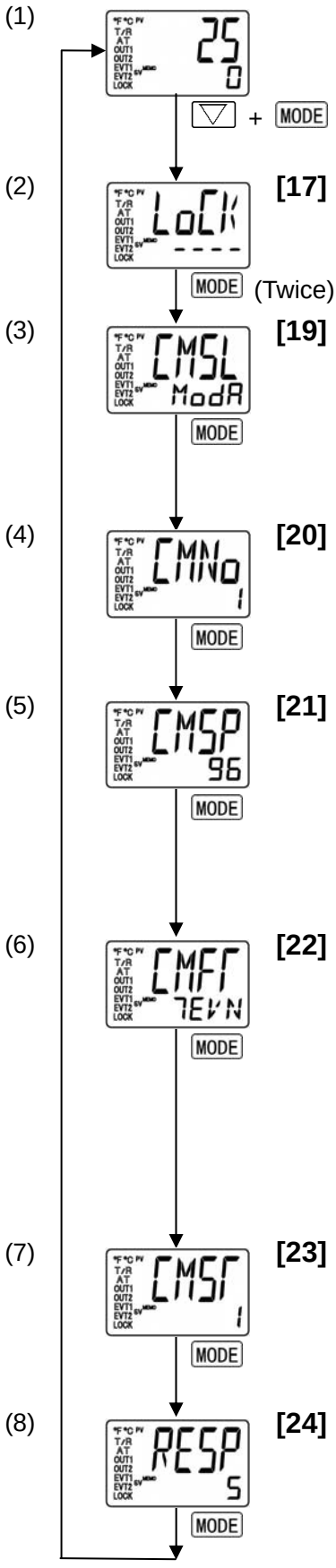

Proceed to Auxiliary function setting mode.

Press MODE key while pressing ▽ key in the PV/SV display mode.

The unit proceeds to Auxiliary function setting mode.

[17] Auxiliary function setting mode

Press MODE key twice.

The unit proceeds to Communication protocol selection.

[19] Communication protocol selection

Select the communication protocol.

ModA : Modbus ASCII mode (Default)

ModR : Modbus RTU mode

MEWT : MEWTOCOL (Slave)

[20] Instrument number setting

Set the instrument number of the controller individually when communicating by connecting plural instruments.

1 to 99 (Default: 1)

[21] Communication speed selection

Set the communication speed equal to that of the host computer.

24 : 2400bps

48 : 4800bps

96 : 9600bps (Default)

192 : 19200bps

[22] Data bit/Parity selection

Select the data bit and parity.

8NoN : 8 bits/No parity

7NoN : 7 bits/ No parity

8EVN : 8 bits/Even

7EVN : 7 bits/Even (Default)

8odd : 8 bits/Odd

7odd : 7 bits/Odd

[23] Stop bit selection

Select the stop bit.

1 : 1 (Default)

2 : 2

[24] Communication response time setting

Set the minimum response time.

5 to 99 (Default: 5ms)

12.4 Communication procedures

Communication starts with command transmission from the host computer (hereafter Master) and ends with the response of the KT4H/B (hereafter Slave).

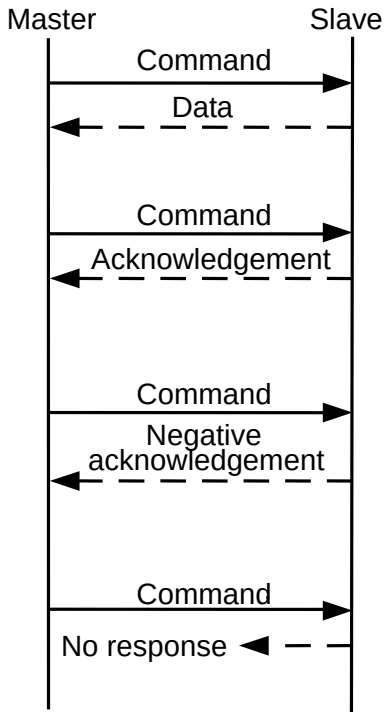

(Fig. 12.4-1)

- **Response with data**
  When the master sends the reading command, the slave responds with the corresponding set value or current status.

- **Acknowledgement**
  When the master sends the setting command, the slave responds by sending an acknowledgement after the processing is terminated.

- **Negative acknowledgement**
  When the master sends a non-existent command or value out of the setting range, the slave returns a negative acknowledgement.

- **No response**
  The slave will not respond to the master in the following cases.
  - Global address “FF” (MEWTOCOL) is set.
  - Broadcast address (Modbus protocol) is set.
  - Communication error (framing error, parity error)
  - LRC discrepancy (Modbus ASCII mode)
  - CRC-16 discrepancy (Modbus RTU mode)

Communication timing of the RS-485

Master side (Notice on programming)

Set the program so that the master can disconnect the transmitter from the communication line within a 1 character transmission period after sending the command in preparation for reception of the response from the slave.

To avoid the collision of transmissions between the master and the slave, send the next command after carefully checking that the master received the response.

Slave side

When the slave starts transmission through the communication line, the slave is arranged so as to provide an idle status (mark status) transmission period of 5ms or more (communication response time from 5 to 99ms settable) before sending the response to ensure synchronization on the receiving side.

The slave is arranged so as to disconnect the transmitter from the communication line within a 1 character transmission period after sending the response.

12.5 MEWTOCOL

12.5.1 Data format

Start bit : 1 bit
Data bit : 7 bits (8 bits) Selectable
Parity : Even (No parity, Odd) Selectable
Stop bit : 1 bit (2 bits) Selectable

12.5.2 Command configuration

MEWETOCOL of the KT4H/B uses RD and WD commands.
Writing and reading of plural word data cannot be carried out.
Be sure to read and write one word at a time because continuous reading/writing of plural data is impossible.
All commands are composed of ASCII.
Numerals written on the command represent number of characters.

(1) RD (Word data reading) command protocol configuration

1	2	1	2	1	5	5	2	1
% (25H)	Address (Decimal)	# (23H)	Command code RD	Data code D	Top data item (Decimal) (*)	Top data item (Decimal) (*)	BCC	C_R (0DH)

(*): KT4H/B cannot read plural word data. Make sure that both top data items are the same.

Acknowledgement

1	2	1	2	4	2	1
% (25H)	Address (Decimal)	$ (24H)	Command code RD	Reading top data (Hexadecimal)	BCC	C_R (0DH)

$16^1\ 16^0\ 16^3\ 16^2$
Low High

Negative acknowledgement

1	2	1	2	2	1
% (25H)	Address (Decimal)	! (21H)	Error code (Hexadecimal)	BCC	C_R (0DH)

(2) WD (Word data writing) command protocol configuration

1	2	1	2	1	5	5	4	2	1
% (25H)	Address (Decimal)	# (23H)	Command code WD	Data code D	Top data item (Decimal) (*)	Top data item (Decimal) (*)	Writing top data (Hexadecimal)	BCC	C_R (0DH)

$16^1\ 16^0\ 16^3\ 16^2$
Low High

(*): KT4H/B cannot read plural word data. Make sure that both top data items are the same.

Acknowledgement

1	2	1	2	2	1
% (25H)	Address (Decimal)	$ (24H)	Command code WD	BCC	C_R (0DH)

Negative acknowledgement

1	2	1	2	2	1
% (25H)	Address (Decimal)	! (21H)	Error code (Hexadecimal)	BCC	C_R (0DH)

Header : Code to represent the beginning of the command or the response.
ASCII code % (25H) is used.

Instrument number (Address): Numbers by which the master discerns each slave.
Decimal 2 digits of instrument number from 1 to 99 and global addresses EE, FF are used.
Global addresses are used when the same writing command is sent to all the slaves connected.
For the global address EE, instrument number of the response command is EE.
For the global address FF, the response is not returned.

Command : # (23H) Command
$ (24H) Response (Normal)
! (21H) Response (Error)

Command code: RD; Word data reading (Continuous reading of plural data from the KT4H/B is impossible.)
WD; Word data writing (Continuous writing of plural data to the KT4H/B is impossible.)

Data code : ASCII code D (44H) is used.

Data : Composed of hexadecimal 4 digits, and ASCII codes are used.
A negative number is represented with 2's complement.

BCC (Block check code): 2-character data to detect communication errors.
Longitudinal parity
Exclusive OR (XOR) from header to the last character is calculated, and represented with ASCII codes.
When ** is inserted instead of BCC, transmission is possible without BCC.
However, a BCC attached response will be returned.

Terminator : Represents the end of command. ASCII code C_R (0DH) is used.

Error code : Represents an error type. Composed of hexadecimal 2 digits.

Error code	Contents
40H (34H 30H)	BCC error
41H (34H 31H)	Except # and data item
42H (34H 32H)	Command except RD and WD
43H (34H 33H)	Transmission format, Procedure error, Delimiter (&) error
60H (36H 30H)	Data codes except D
61H (36H 31H)	Data error (data item discrepancy)
63H (36H 33H)	Mode error

12.5.3 BCC (Block check code) calculation example

(e.g.) Reading [Address 1, SV (DT0102)]

%	01	#	RD	D	00102	00102
25H	30H 31H	23H	52H 44H	44H	30H 30H 31H 30H 32H	30H 30H 31H 30H 32H

Exclusive OR: 55H BCC(H)=5(35H) BCC(L)=5(35H)

%	01	#	RD	D	00102	00102	55	C_R

12.5.4 Message example

(1) Reading (Address 1, PV)

• RD (Word data reading) command from the master

%	Address (Decimal)	#	Command code RD	Data code D	Top data item (Decimal) 00356	Top data item (Decimal) 00356	BCC	C_R
25H	30H 31H	23H	52H 44H	44H	30H 30H 33H 35H 36H	30H 30H 33H 35H 36H	35H 35H	0DH

• A response command from the slave in normal status (When PV=600℃ [0258H])

%	Address (Decimal)	$	Command code RD	Reading data [0258H]	BCC	C_R
25H	30H 31H	24H	52H 44H	35H 38H 30H 32H	31H 39H	0DH

(2) Reading (Address 1, SV)

• RD (Word data reading) command from the master

%	Address (Decimal)	#	Command code RD	Data code D	Top data item (Decimal) 00102	Top data item (Decimal) 00102	BCC	C_R
25H	30H 31H	23H	52H 44H	44H	30H 30H 31H 30H 32H	30H 30H 31H 30H 32H	35H 35H	0DH

• Response command from the slave in normal status (When SV=600℃ [0258H])

%	Address (Decimal)	$	Command code RD	Reading data [0258H]	BCC	C_R
25H	30H 31H	24H	52H 44H	35H 38H 30H 32H	31H 39H	0DH

(3) Setting (Address 1, SV) (When setting SV to 600℃ [0258H])

• WD (Word data writing) command from the master

%	Address (Decimal)	#	Command code WD	Data code D	Top data item (Decimal) 00102	Top data item (Decimal) 00102	Writing data [0258H]	BCC	C_R
25H	30H 31H	23H	57H 44H	44H	30H 30H 31H 30H 32H	30H 30H 31H 30H 32H	35H 38H 30H 32H	35H 35H	0DH

• Response command from the slave in normal status

%	Address (Decimal)	$	Command code WD	BCC	C_R
25H	30H 31H	24H	57H 44H	31H 33H	0DH

12.5.5 Communication command and data item table

MEWTOCOL command code	Data item		Data
RD	DT00100	Use in the system (Never use WD command. If WD command is sent to the KT4H, the KT4H may not be operable.)	
RD/WD	DT00102	SV	Set value, Decimal point ignored
RD/WD	DT00106	Auto-tuning/Auto-reset	0000H: Cancel 0001H: Perform
RD/WD	DT00108	OUT1 proportional band	Set value, Decimal point ignored
RD/WD	DT00110	OUT2 proportional band	Set value, Decimal point ignored
RD/WD	DT00112	Integral time	Set value
RD/WD	DT00114	Derivative time	Set value
RD/WD	DT00116	OUT1 proportional cycle	Set value
RD/WD	DT00118	OUT2 proportional cycle	Set value
RD/WD	DT00122	Alarm 1 value	Set value, Decimal point ignored
RD/WD	DT00124	Alarm 2 value	Set value, Decimal point ignored
RD/WD	DT00130	Heater burnout alarm value	Set value, Decimal point ignored
RD/WD	DT00136	Set value lock	0000H: Unlock 0001H: Lock 1 0002H: Lock 2 0003H: Lock 3
RD/WD	DT00142	Sensor correction	Set value, Decimal point ignored
RD/WD	DT00144	Overlap band/Dead band	Set value
RD/WD	DT00148	Scaling high limit	Set value, Decimal point ignored
RD/WD	DT00150	Scaling low limit	Set value, Decimal point ignored
RD/WD	DT00152	Decimal point place	0000H: xxxx 0001H: xxx.x 0002H: xx.xx 0003H: x.xxx
RD/WD	DT00154	PV filter time constant	Set value, Decimal point ignored
RD/WD	DT00156	OUT1 high limit	Set value
RD/WD	DT00158	OUT1 low limit	Set value
RD/WD	DT00160	OUT1 ON/OFF action hysteresis	Set value, Decimal point ignored
RD/WD	DT00162	OUT2 action mode	0000H: Air cooling 0001H: Oil cooling 0002H: Water cooling
RD/WD	DT00164	OUT2 high limit	Set value
RD/WD	DT00166	OUT2 low limit	Set value
RD/WD	DT00168	OUT2 ON/OFF action hysteresis	Set value, Decimal point ignored
RD/WD	DT00170	Alarm 1 type	0000H: No alarm action 0001H: High limit alarm 0002H: Low limit alarm 0003H: High/Low limits alarm 0004H: High/Low limit range alarm 0005H: Process high alarm 0006H: Process low alarm 0007H: High limit alarm with standby 0008H: Low limit alarm with standby 0009H: High/Low limits with standby
RD/WD	DT00172	Alarm 2 type	The same as the Alarm 1 type
RD/WD	DT00174	Alarm 1 hysteresis	Set value, Decimal point ignored
RD/WD	DT00176	Alarm 2 hysteresis	Set value, Decimal point ignored
RD/WD	DT00182	Alarm 1 action delayed timer	Set value
RD/WD	DT00184	Alarm 2 action delayed timer	Set value

MEWTOCOL command code	Data item		Data
RD/WD	DT00202	SV rise rate	Set value, Decimal point ignored
RD/WD	DT00204	SV fall rate	Set value, Decimal point ignored
RD/WD	DT00210	Control output OUT/OFF	0000H: Control output ON 0001H: Control output OFF
RD/WD	DT00212	Auto/Manual control	0000H: Automatic control 0001H: Manual control
RD/WD	DT00214	Manual control MV	Set value
RD/WD	DT00228	Alarm 1 Energized/Deenergized	0000H: Energized 0001H: Deenergized
RD/WD	DT00230	Alarm 2 Energized/Deenergized	0000H: Energized 0001H: Deenergized
RD/WD	DT00236	Input type	0000H: K -200 to 1370℃ 0001H: K -200.0 to 400.0℃ 0002H: J -200 to 1000℃ 0003H: R 0 to 1760℃ 0004H: S 0 to 1760℃ 0005H: B 0 to 1820℃ 0006H: E -200 to 800℃ 0007H: T -200.0 to 400.0℃ 0008H: N -200 to 1300℃ 0009H: PL-Ⅱ 0 to 1390℃ 000AH: C (W/Re5-26) 0 to 2315℃ 000BH: Pt100 -200.0 to 850.0℃ 000CH: JPt100 -200.0 to 500.0℃ 000DH: Pt100 -200 to 850℃ 000EH: JPt100 -200 to 500℃ 000FH: K -320 to 2500℉ 0010H: K -320.0 to 750.0℉ 0011H: J -320 to 1800℉ 0012H: R 0 to 3200℉ 0013H: S 0 to 3200℉ 0014H: B 0 to 3300℉ 0015H: E -320 to 1500℉ 0016H: T -320.0 to 750.0℉ 0017H: N -320 to 2300℉ 0018H: PL-Ⅱ 0 to 2500℉ 0019H: C (W/Re5-26) 0 to 4200℉ 001AH: Pt100 -320.0 to 1500.0℉ 001BH: JPt100 -320.0 to 900.0℉ 001CH: Pt100 -320 to 1500℉ 001DH: JPt100 -320 to 900℉ 001EH: 4 to 20mA -2000 to 10000 001FH: 0 to 20mA -2000 to 10000 0020H: 0 to 1V -2000 to 10000 0021H: 0 to 5V -2000 to 10000 0022H: 1 to 5V -2000 to 10000 0023H: 0 to 10V -2000 to 10000
RD/WD	DT00238	Direct/Reverse action	0000H: Reverse action 0001H: Direct action
RD/WD	DT00242	AT bias	Set value
RD/WD	DT00244	ARW	Set value
RD/WD	DT00246	Heater burnout alarm 2 value	Set value, Decimal point ignored

MEWTOCOL command code	Data item		Data
RD/WD	DT00260	Backlight	0000H: All are backlit 0001H: Only PV display is backlit 0002H: Only SV display is backlit 0003H: Only action indicators are backlit 0004H: PV+SV displays are backlit 0005H: PV+ action indicators are backlit 0006H: SV+ action indicators are backlit
RD/WD	DT00262	PV color	0000H: Green 0001H: Red 0002H: Orange 0003H: When Alarm ON, Green→Red 0004H: When Alarm ON, Orange→Red 0005H: PV color changes continuously 0006H: PV color changes continuously + Alarm ON: Red
RD/WD	DT00264	PV color range	Set value, Decimal point ignored
RD/WD	DT00266	Backlight time	Set value
WD	DT00324	Key operation change flag clearing	0000H: No action 0001H: All clearing
RD	DT00356	PV (Process variable)	Decimal point ignored
RD	DT00358	OUT1 MV	Decimal point ignored
RD	DT00360	OUT2 MV	Decimal point ignored
RD	DT00362	SV (When SV rises or falls)	Decimal point ignored
RD	DT00366	Status flag	
		0000 0000 0000 0000 2^0: OUT1 0: OFF, 1: ON (DC current output type: Not fixed) 2^1: OUT2 0: OFF, 1: ON 2^2: Alarm 1 output 0: OFF, 1: ON 2^3: Alarm 2 output 0: OFF, 1: ON 2^4: Not used, always 0 2^5: Not used, always 0 2^6: Heater burnout alarm 0: OFF, 1: ON (When Sensor burnout, 0: OFF) 2^7: Not used, always 0 2^8: Overscale 0: OFF, 1: ON 2^9: Underscale 0: OFF, 1: ON 2^{10}: Control output OUT/OFF 0: ON, 1: OFF 2^{11}: During Auto-tuning/Auto-reset 0: OFF 1: During Auto-tuning/Auto-reset 2^{12}: OUT/OFF key function 0: OUT/OFF function, 1: Auto/Manual control 2^{13}: Not used, always 0 2^{14}: Auto/Manual control 0: Automatic control, 1: Manual control 2^{15}: Change in key operation 0: No, 1: Yes	
RD	DT00368	CT1 current value	Decimal point ignored
RD	DT00370	CT2 current value	Decimal point ignored

MEWTOCOL command code	Data item	Data
RD	DT00422	Instrument specification flag

0000 0000 0000 0000

- 2^0: Contact input 0: Not added, 1: Added
- 2^1: Serial communication 0: Not added, 1: Added
- 2^2: Heater burnout alarm 0: Not added, 1: Added
- 2^3: Heater burnout alarm rating 0: 20A, 1: 50A
- 2^4: Heater burnout alarm specification 0: Single phase, 1: 3-phase
- 2^5: Alarm 2 output 0: Not added, 1: Added
- 2^6: Heating/Cooling control output 0: Not added, 1: Added
- 2^7 to 2^{15}: Not used, always 0

● **Data**

Note on setting and reading command

- The data (set value, decimal) is converted to hexadecimal figures. A negative number is represented by 2's complement.
- When connecting plural slaves, the instrument numbers (addresses) must not be duplicated.

Setting command

- Setting range of each item is the same as that of key operation.
- When the data (set value) has a decimal point, a whole number (hexadecimal) without a decimal point is used.
- If the alarm type is changed during Alarm 1 type selection (DT00170) and Alarm 2 type selection (DT00172), the Alarm value will revert to “0”. Also alarm output status will be initialized.
- It is possible to set the set value with the setting command of the communication function even when the set value is locked.
- Although the options are not applied, setting the items for the options is possible using the setting command. However, they will not function.
- The instrument numbers and communication speed of the slave cannot be set by communication function.
- When sending a command by Global address “FF”, the same command is sent to all the slaves connected. However, the response is not returned.
- The memory can store up to 1,000,000 (one million) entries. If the number of settings exceeds the limit, the data will not be saved. So frequent transmission via communication is not recommended.

Reading command

- When the data (set value) has a decimal point, a whole number (hexadecimal) without a decimal point is used.

● **Negative acknowledgement**

The slave will return Error code 41H in the following cases.

- If control output OUT/OFF function (DT00210) is selected after selecting Auto/Manual control function during OUT/OFF key function selection.
- If Auto/Manual control (DT00212) is selected after selecting OUT/OFF function during OUT/OFF key function selection.
- If Manual control MV (DT00214) is set during automatic control.
- When Auto-tuning/Auto-reset (DT00106) is selected during PI action or ON/OFF action.

The slave will return Error code 63H in the following cases.

- If “Cancel (0000H)” of Auto-tuning/Auto-reset (DT00106) is selected while Auto-tuning/Auto-reset is being cancelled.
- If “Perform (0001H)” of Auto-tuning/Auto-reset (DT00106) is selected while Auto-tuning/Auto-reset is performing.

12.6 Modbus protocol

12.6.1 Transmission mode

There are 2 transmission modes (ASCII and RTU) in Modbus protocol.

12.6.2 ASCII mode

Hexadecimal (0 to 9, A to F), which is divided into high order (4-bit) and low order (4-bit) out of 8-bit binary data in command is transmitted as ASCII characters.

Data format Start bit : 1 bit
Data bit : 7 bits
Parity : Even (No parity, Odd) Selectable
Stop bit : 1 bit (2 bits) Selectable

Error detection : LRC (Longitudinal Redundancy Check)

Data interval : 1 second or less

(1) Message configuration

ASCII mode message is configured to start by Header [: (colon)(3AH)] and end by Delimiter [CR (carriage return) (0DH) + LF (Line feed)(0AH)].

Header (:)	Slave address	Function code	Data	Error check LRC	Delimiter (CR)	Delimiter (LF)

Slave address

Slave address is an individual instrument number on the slave side and is set within the range 0 to 95 (00H to 5FH).

The master identifies slaves by the slave address of the requested message.

The slave informs the master which slave is responding to the master by placing its own address in the response message.

Slave address 0 (00H, broadcast address) can identify all the slaves connected. However slaves do not respond.

Function code

The function code is the command code for the slave to undertake the following action types.

Function code	Contents
03 (03H)	Reading the set value and information from slaves
06 (06H)	Setting to slaves

Function code is used to discern whether the response is normal (acknowledgement) or if any error (negative acknowledgement) is occurred when the slave returns the response message to the master.

When acknowledgement is returned, the slave simply returns the original function code.

When negative acknowledgement is returned, the MSB of the original function code is set as 1 for the response.

For example, when the master sends request message setting 10H to function code by mistake, slave returns 90H by setting the MSB to 1, because the former is an illegal function.

For negative acknowledgement, the exception codes below are set to the data of the response message and returned to the master in order to inform it of what kind of error has occurred.

Exception code	Contents
1 (01H)	Illegal function (Non-existent function)
2 (02H)	Illegal data address (Non-existent data address)
3 (03H)	Illegal data value (Value out of the setting range)
17 (11H)	Illegal setting [Unsettable status (e.g. during AT)]
18 (12H)	Illegal setting (During setting mode by key operation)

Data

Data differs depending on the function code.

A request message from the master is composed of data item, number of data and setting data.

A response message from the slave is composed of a number of bytes, data and exception code in negative acknowledgements.

The number of data to be dealt with in one message is “1”. Therefore the number of data is fixed as (30H)(30H)(30H)(31H).

Effective range of data is -32768 to 32767 (8000H to 7FFFH).

Error check: 2-character data to detect communication errors. Refer to “(2) Error check of ASCII mode”.

(2) Error check of ASCII mode

After calculating LRC (Longitudinal Redundancy Check) from the slave address to the end of data, the calculated 8-bit data is converted to two ASCII characters and are appended to the end of message.

How to calculate LRC

① Create a message in RTU mode.
② Add all the values from the slave address to the end of data. This is assumed as X.
③ Make a complement for X (bit reverse). This is assumed as X.
④ Add a value of 1 to X. This is assumed as X.
⑤ Set X as an LRC to the end of the message.
⑥ Convert the whole message to ASCII characters.

(3) Message example of ASCII mode

① **Reading (Address 1, PV)**

• A request message from the master

The number of data means the data item to be read, and it is fixed as 1 (30H 30H 30H 31H).

Header	Slave address	Function code	Data item [0080H]	Number of data [0001H]	Error check LRC	Delimiter CR+LF
(3AH)	(30H 31H)	(30H 33H)	(30H 30H 38H 30H)	(30H 30H 30H 31H)	(37H 42H)	(0DH 0AH)

• Response message from the slave in normal status (When PV=600℃ [0258H])

The number of response byte means the number of bytes of the data which has been read, and it is fixed as 2 (30H 32H).

Header	Slave address	Function code	Number of response byte [02H] (30H 32H)	Data [0258H]	Error check LRC	Delimiter CR+LF
(3AH)	(30H 31H)	(30H 33H)		(30H 32H 35H 38H)	(41H 30H)	(0DH 0AH)

② **Reading (Address 1, SV)**

• A request message from the master

The number of data means the data item to be read, and it is fixed as 1 (30H 30H 30H 31H).

Header	Slave address	Function code	Data item [0001H]	Number of data [0001H]	Error check LRC	Delimiter CR+LF
(3AH)	(30H 31H)	(30H 33H)	(30H 30H 30H 31H)	(30H 30H 30H 31H)	(46H 41H)	(0DH 0AH)

• Response message from the slave in normal status (When SV=600℃ [0258H])

The number of response byte means the number of bytes of the data which has been read, and it is fixed as 2 (30H 32H).

Header	Slave address	Function code	Number of response byte [02H]	Data [0258H]	Error check LRC	Delimiter CR+LF
(3AH)	(30H 31H)	(30H 33H)	(30H 32H)	(30H 32H 35H 38H)	(41H 30H)	(0DH 0AH)

• Response message from the slave in exception (error) status (When a data item has been mistaken)

The function code MSB is set to 1 for the response message in exception (error) status [83H (38H 33H)]. The exception code 02H (30H 32H: Non-existent data address) is returned.

Header	Slave address	Function code	Exception code [02H]	Error check LRC	Delimiter CR+LF
(3AH)	(30H 31H)	(38H 33H)	(30H 32H)	(37H 41H)	(0DH 0AH)

③ **Setting (Address 1, SV)** (When setting SV to 600℃ [0258H])

• A request message from the master

Header	Slave address	Function code	Data item [0001H]	Number of data [0258H]	Error check LRC	Delimiter CR+LF
(3AH)	(30H 31H)	(30H 36H)	(30H 30H 30H 31H)	(30H 32H 35H 38H)	(39H 45H)	(0DH 0AH)

• Response message from the slave in normal status

Header	Slave address	Function code	Data item [0001H]	Data [0258H]	Error check LRC	Delimiter CR+LF
(3AH)	(30H 31H)	(30H 36H)	(30H 30H 30H 31H)	(30H 32H 35H 38H)	(39H 45H)	(0DH 0AH)

• Response message from the slave in exception (error) status (When a value out of the setting range has been set)

The function code MSB is set to 1 for the response message in exception (error) status [86H (38H 36H)]. The exception code 03H (30H 33H: Value out of the setting range) is returned.

Header	Slave address	Function code	Exception code [03H]	Error check LRC	Delimiter CR+LF
(3AH)	(30H 31H)	(38H 36H)	(30H 33H)	(37H 36H)	(0DH 0AH)

12.6.2 RTU mode

8-bit binary data in command is transmitted as it is.

Data format Start bit : 1 bit
Data bit : 8 bits
Parity : No parity (Even, Odd) Selectable
Stop bit : 1 bit (2 bits) Selectable

Error detection: CRC-16 (Cyclic Redundancy Check)

Data interval : 3.5 character transmission time or less

(1) Message configuration

RTU mode is configured to start after idle time processing of more than 3.5 character transmissions and end after idle time processing of more than 3.5 character transmissions.

3.5 idle characters	Slave address	Function code	Data	Error check CRC-16	3.5 idle characters

Slave address:

Slave address is an individual instrument number on the slave side and is set within the range 0 to 95 (00H to 5FH).

The master identifies slaves by the slave address of the requested message.

The slave informs the master which slave is responding to the master by placing its own address in the response message.

Slave address 0 (00H, broadcast address) can identify all the slaves connected. However slaves do not respond.

Function code

The function code is the command code for the slave to undertake the following action types.

Function code	Contents
03 (03H)	Reading the set value and information from slaves
06 (06H)	Setting to slaves

Function code is used to discern whether the response is normal (acknowledgement) or if any error (negative acknowledgement) has occurred when the slave returns the response message to the master.

When acknowledgement is returned, the slave simply returns the original function code.

When negative acknowledgement is returned, the MSB of the original function code is set as 1 for the response.

For example, when the master sends request message setting 10H to function code by mistake, slave returns 90H by setting the MSB to 1, because the former is an illegal function.

For negative acknowledgement, the exception codes below are set to the data of response message and returned to the master in order to inform it of what kind of error has occurred.

Exception code	Contents
1 (01H)	Illegal Function (Non-existent function)
2 (02H)	Illegal data address (Non-existent data address)
3 (03H)	Illegal data value (Value out of the setting range)
17 (11H)	Illegal setting [Unsettable status (e.g. during AT)]
18 (12H)	Illegal setting (During setting mode by key operation)

Data

Data differs depending on the function code.

A request message from the master side is composed of data item, number of data and setting data.

A response message from the slave side is composed of number of bytes, data and exception code in negative acknowledgement.

The number of data to be dealt with in one message is “1”. Therefore the number of data is fixed as (0001H).

The number of response byte is 02H.

Effective range of data is –32768 to 32767 (8000H to 7FFFH).

Error check: 16-bit data to detect communication errors. Refer to “(2) Error check of RTU mode”.

(2) Error check of RTU mode

After calculating CRC-16 (Cyclic Redundancy Check) from the slave address to the end of data, the calculated 16-bit data is appended to the end of message in sequence from low order to high order.

How to calculate CRC

In the CRC system, the information is divided by the polynomial series. The remainder is added to the end of the information and transmitted. The generation of polynomial series is as follows.
(Generation of polynomial series: $X^{16} + X^{15} + X^{2} + 1$)

① Initialize the CRC-16 data (assumed as X) (FFFFH).
② Calculate exclusive OR (XOR) with the 1st data and X. This is assumed as X.
③ Shift X one bit to the right. This is assumed as X.
④ When a carry is generated as a result of the shift, XOR is calculated by X of ③ and the fixed value (A001H). This is assumed as X.
If a carry is not generated, go to step ⑤.
⑤ Repeat steps ③ and ④ until shifting 8 times.
⑥ XOR is calculated with the next data and X. This is assumed as X.
⑦ Repeat steps ③ to ⑤.
⑧ Repeat steps ③ to ⑤ up to the last data.
⑨ Set X as CRC-16 to the end of message in sequence from low order to high order.

(3) Message example of RTU mode

① **Reading (Address 1, PV)**

• A request message from the master
The number of data means the data item to be read, and it is fixed as 1 (0001H).

3.5 idle characters	Slave address (01H)	Function code (03H)	Data item (0080H)	Number of data (0001H)	Error check CRC-16 (85E2H)	3.5 idle characters

• Response message from the slave in normal status (When PV=600℃ [0258H])
The number of response byte means number of bytes of the data which has been read, and it is fixed as 2 (02H).

3.5 idle characters	Slave address (01H)	Function code (03H)	Number of response byte (02H)	Number of data (0258H)	Error check CRC-16 (B8DEH)	3.5 idle characters

② **Reading (Address 1, SV)**

• A request message from the master

The number of data means the data item to be read, and it is fixed as 1 (0001H).

3.5 idle characters	Slave address (01H)	Function code (03H)	Data item (0001H)	Number of data (0001H)	Error check CRC-16 (D5CAH)	3.5 idle characters

• Response message from the slave in normal status (When SV=600℃ [0258H])

The number of response byte means number of bytes of the data which has been read, and it is fixed as 2 (02H).

3.5 idle characters	Slave address (01H)	Function code (03H)	Number of response byte (02H)	Number of data (0258H)	Error check CRC-16 (B8DEH)	3.5 idle characters

• Response message from the slave in exception (error) status (When a data item has been mistaken)

The function code MSB is set to 1 for the response message in exception (error) status (83H).

The exception code 02H (Non-existent data address) is returned.

3.5 idle characters	Slave address (01H)	Function code (83H)	Exception code (02H)	Error check CRC-16 (C0F1H)	3.5 idle characters

③ **Setting (Address 1, SV)** (When setting SV to 600℃ [0258H])

• A request message from the master

3.5 idle characters	Slave address (01H)	Function code (06H)	Data item (0001H)	Number of data (0258H)	Error check CRC-16 (D890H)	3.5 idle characters

• Response message from the slave in normal status

3.5 idle characters	Slave address (01H)	Function code (06H)	Data item (0001H)	Number of data (0258H)	Error check CRC-16 (D890H)	3.5 idle characters

• Response message from the slave in exception (error) status (When a value out of the setting range has been set)

The function code MSB is set to 1 for the response message in exception (error) status (86H).

The exception code 03H (Value out of the setting range) is returned.

3.5 idle characters	Slave address (01H)	Function code (86H)	Exception code (03H)	Error check CRC-16 (0261H)	3.5 idle characters

12.6.3 Communication command and data item table

Modbus function code	Data item		Data
03H	0000H	Use in the system (Never use function code 06H. If function code 06H is sent to the KT4H, the KT4H may not be operable.)	
03H/06H	0001H	SV	Set value, Decimal point ignored
03H/06H	0003H	Auto-tuning/Auto-reset	0000H: Cancel 0001H: Perform
03H/06H	0004H	OUT1 proportional band	Set value, Decimal point ignored
03H/06H	0005H	OUT2 proportional band	Set value, Decimal point ignored
03H/06H	0006H	Integral time	Set value
03H/06H	0007H	Derivative time	Set value
03H/06H	0008H	OUT1 proportional cycle	Set value
03H/06H	0009H	OUT2 proportional cycle	Set value
03H/06H	000BH	Alarm 1 value	Set value, Decimal point ignored
03H/06H	000CH	Alarm 2 value	Set value, Decimal point ignored
03H/06H	000FH	Heater burnout alarm value	Set value, Decimal point ignored
03H/06H	0012H	Set value lock	0000H: Unlock 0001H: Lock 1 0002H: Lock 2 0003H: Lock 3
03H/06H	0015H	Sensor correction	Set value, Decimal point ignored
03H/06H	0016H	Overlap band/Dead band	Set value
03H/06H	0018H	Scaling high limit	Set value, Decimal point ignored
03H/06H	0019H	Scaling low limit	Set value, Decimal point ignored
03H/06H	001AH	Decimal point place	0000H: xxxx 0001H: xxx.x 0002H: xx.xx 0003H: x.xxx
03H/06H	001BH	PV filter time constant	Set value, Decimal point ignored
03H/06H	001CH	OUT1 high limit	Set value
03H/06H	001DH	OUT1 low limit	Set value
03H/06H	001EH	OUT1 ON/OFF action hysteresis	Set value, Decimal point ignored
03H/06H	001FH	OUT2 action mode	0000H: Air cooling 0001H: Oil cooling 0002H: Water cooling
03H/06H	0020H	OUT2 high limit	Set value
03H/06H	0021H	OUT2 low limit	Set value
03H/06H	0022H	OUT2 ON/OFF action hysteresis	Set value, Decimal point ignored
03H/06H	0023H	Alarm 1 type	0000H: No alarm action 0001H: High limit alarm 0002H: Low limit alarm 0003H: High/Low limits alarm 0004H: High/Low limit range alarm 0005H: Process high alarm 0006H: Process low alarm 0007H: High limit alarm with standby 0008H: Low limit alarm with standby 0009H: High/Low limits with standby
03H/06H	0024H	Alarm 2 type	The same as the Alarm 1 type
03H/06H	0025H	Alarm 1 hysteresis	Set value, Decimal point ignored
03H/06H	0026H	Alarm 2 hysteresis	Set value, Decimal point ignored
03H/06H	0029H	Alarm 1 action delayed timer	Set value
03H/06H	002AH	Alarm 2 action delayed timer	Set value

Modbus function code	Data item		Data
03H/06H	0033H	SV rise rate	Set value, Decimal point ignored
03H/06H	0034H	SV fall rate	Set value, Decimal point ignored
03H/06H	0037H	Control output OUT/OFF	0000H: Control output ON 0001H: Control output OFF
03H/06H	0038H	Auto/Manual control	0000H: Automatic control 0001H: Manual control
03H/06H	0039H	Manual control MV	Set value
03H/06H	0040H	Alarm 1 Energized/Deenergized	0000H: Energized 0001H: Deenergized
03H/06H	0041H	Alarm 2 Energized/Deenergized	0000H: Energized 0001H: Deenergized
03H/06H	0044H	Input type	0000H: K -200 to 1370℃ 0001H: K -200.0 to 400.0℃ 0002H: J -200 to 1000℃ 0003H: R 0 to 1760℃ 0004H: S 0 to 1760℃ 0005H: B 0 to 1820℃ 0006H: E -200 to 800℃ 0007H: T -200.0 to 400.0℃ 0008H: N -200 to 1300℃ 0009H: PL-Ⅱ 0 to 1390℃ 000AH: C(W/Re5-26) 0 to 2315℃ 000BH: Pt100 -200.0 to 850.0℃ 000CH: JPt100 -200.0 to 500.0℃ 000DH: Pt100 -200 to 850℃ 000EH: JPt100 -200 to 500℃ 000FH: K -320 to 2500℉ 0010H: K -320.0 to 750.0℉ 0011H: J -320 to 1800℉ 0012H: R 0 to 3200℉ 0013H: S 0 to 3200℉ 0014H: B 0 to 3300℉ 0015H: E -320 to 1500℉ 0016H: T -320.0 to 750.0℉ 0017H: N -320 to 2300℉ 0018H: PL-Ⅱ 0 to 2500℉ 0019H: C (W/Re5-26) 0 to 4200℉ 001AH: Pt100 -320.0 to 1500.0℉ 001BH: JPt100 -320.0 to 900.0℉ 001CH: Pt100 -320 to 1500℉ 001DH: JPt100 -320 to 900℉ 001EH: 4 to 20mA -2000 to 10000 001FH: 0 to 20mA -2000 to 10000 0020H: 0 to 1V -2000 to 10000 0021H: 0 to 5V -2000 to 10000 0022H: 1 to 5V -2000 to 10000 0023H: 0 to 10V -2000 to 10000
03H/06H	0045H	Direct/Reverse action	0000H: Reverse action 0001H: Direct action
03H/06H	0047H	AT bias	Set value
03H/06H	0048H	ARW	Set value
03H/06H	0049H	Heater burnout alarm 2 value	Set value, Decimal point ignored

Modbus function code	Data item		Data
03H/06H	0050H	Backlight	0000H: All are backlit 0001H: Only PV display is backlit 0002H: Only SV display is backlit 0003H: Only action indicators are backlit 0004H: PV+SV displays are backlit 0005H: PV+ action indicators are backlit 0006H: SV+ action indicators are backlit
03H/06H	0051H	PV color	0000H: Green 0001H: Red 0002H: Orange 0003H: When Alarm ON, Green→Red 0004H: When Alarm ON, Orange→Red 0005H: PV color changes continuously 0006H: PV color changes continuously + Alarm ON: Red
03H/06H	0052H	PV color range	Set value, Decimal point ignored
03H/06H	0053H	Backlight time	Set value
06H	0070H	Key operation change flag clearing	0000H: No action 0001H: All clearing
03H	0080H	PV (Process variable)	Decimal point ignored
03H	0081H	OUT1 MV	Decimal point ignored
03H	0082H	OUT2 MV	Decimal point ignored
03H	0083H	SV (When SV rises or falls)	Decimal point ignored
03H	0085H	Status flag	
		0000 0000 0000 0000 2^0: OUT1 0: OFF, 1: ON (DC current output type: Not fixed) 2^1: OUT2 0: OFF, 1: ON 2^2: Alarm 1 output 0: OFF, 1: ON 2^3: Alarm 2 output 0: OFF, 1: ON 2^4: Not used, always 0 2^5: Not used, always 0 2^6: Heater burnout alarm output 0: OFF, 1: ON (When Sensor burnout, 0: OFF) 2^7: Not used, always 0 2^8: Overscale 0: OFF, 1: ON 2^9: Underscale 0: OFF, 1: ON 2^{10}: Control output OUT/OFF 0: ON, 1: OFF 2^{11}: During Auto-tuning/Auto-reset 0: OFF 1: During Auto-tuning/Auto-reset 2^{12}: OUT/OFF key function 0: OUT/OFF function, 1: Auto/Manual control 2^{13}: Not used, always 0 2^{14}: Auto/Manual control 0: Automatic control, 1: Manual control 2^{15}: Change in key operation 0: No, 1: Yes	
03H	0086H	CT1 current value	Decimal point ignored
03H	0087H	CT2 current value	Decimal point ignored

Modbus function code	Data item		Data
03H	00A1H	Instrument specification flag	

0000 0000 0000 0000

- 2^0: Contact input 0: Not added, 1: Added
- 2^1: Serial communication 0: Not added, 1: Added
- 2^2: Heater burnout alarm 0: Not added, 1: Added
- 2^3: Heater burnout alarm rating 0: 20A, 1: 50A
- 2^4: Heater burnout alarm specification
  0: Single phase 1: 3-phase
- 2^5: Alarm 2 output 0: Not added, 1: Added
- 2^6: Heating/Cooling control output
  0: Not added, 1: Added
- 2^7 to 2^{15}: Not used, always 0

● **Data**

Note on setting and reading command

- The data (set value, decimal) is converted to hexadecimal figures.
  A negative number is represented by 2's complement.
- When connecting plural slaves, the instrument numbers (addresses) must not be duplicated.

Setting command

- Setting range of each item is the same as that of key operation.
- When the data (set value) has a decimal point, a whole number (hexadecimal) without a decimal point is used.
- If the alarm type is changed during Alarm 1 type selection (0023H) and Alarm 2 type selection (0024H), the Alarm value will revert to “0”. Also alarm output status will be initialized.
- It is possible to set the set value with the setting command of the communication function even when the set value is locked.
- Although the options are not applied, setting the items for the options is possible using the setting command. However, they will not function.
- The instrument numbers and communication speed of the slave cannot be set by communication function.
- When sending a command by broadcast address 0 (00H), the same command is sent to all the slaves connected. However, the response is not returned.
- The memory can store up to 1,000,000 (one million) entries.
  If the number of settings exceeds the limit, the data will not be saved. So frequent transmission via communication is not recommended.

Reading command

- When the data (set value) has a decimal point, a whole number (hexadecimal) without a decimal point is used for a response.

● **Negative acknowledgement**

The slave will return Exception code 1 (01H) in the following cases.

- If control output OUT/OFF function (0037H) is selected after selecting Auto/Manual control function during OUT/OFF key function selection.
- If Auto/Manual control (0038H) is selected after selecting control output OUT/OFF function during OUT/OFF key function selection.
- When Manual control MV (0039H) is set during automatic control.
- When Auto-tuning/Auto-reset (0003H) is selected during PI action or ON/OFF action.

The slave will return Exception code 17 (11H) in the following cases.

- If “Cancel (0000H)” of Auto-tuning/Auto-reset (0003H) is selected while Auto-tuning/Auto-reset is being cancelled.
- When “Perform (0001H)” of Auto-tuning/Auto-reset (0003H) is selected while Auto-tuning/Auto-reset is performing.

13. Specifications

13.1 Standard specifications

Mounting : Flush

Setting : Input system using membrane sheet key

Display
- PV display : 11-segment backlight LCD Red/Green/Orange, character size 12.0 x 5.4mm (H x W)
- SV display : 11-segment backlight LCD Green, character size 6.0 x 3.5mm (H x W)
- MEMO display : 11-segment backlight LCD Green, character size 4.8 x 2.8mm (H x W)
- Action indicators: Backlight Orange

Accuracy (Setting and Indication):
- Thermocouple : Within ±0.2% of each input span±1digit, or within ±2℃ (4℉), whichever is greater
  However R, S inputs, 0 to 200℃ (0 to 400℉): Within ±6℃ (12℉)
  B input, 0 to 300℃ (600℉): Accuracy is not guaranteed
  K, J, E, T, N inputs, less than 0℃ (32℉): Within ±0.4% of input span±1digit
- RTD : Within ±0.1% of each input span±1digit, or within ±1℃ (2℉), whichever is greater
- DC current : Within ±0.2% of each input span±1digit
- DC voltage : Within ±0.2% of each input span±1digit

Input sampling period : 0.25 seconds

Input
- Thermocouple : K, J, R, S, B, E, T, N, PL-Ⅱ, C (W/Re5-26)
  External resistance, 100Ω or less
  (However, B input: External resistance, 40Ω or less)
- RTD : Pt100, JPt100, 3-wire system
  Allowable input lead wire resistance (10Ω or less per wire)
- DC current : 0 to 20mA DC, 4 to 20mA DC
  Input impedance: 50Ω [50Ω shunt resistor (sold separately) must be connected between input terminals.]
  Allowable input current, 50mA or less [When 50Ω shunt resistor (sold separately) is used]
- DC voltage : 0 to 1V DC Input impedance (1MΩ or more)
  Allowable input voltage (5V DC or less)
  Allowable signal source resistance (2kΩ or less)
  : 0 to 5V DC, 1 to 5V DC, 0 to 10V DC Input impedance (100kΩ or more)
  Allowable input voltage (15V DC or less)
  Allowable signal source resistance (100Ω or less)

Control output (OUT1)
- Relay contact : 1a, Control capacity 3A 250V AC (resistive load)
  1A 250V AC (inductive load cosø=0.4)
  Electrical life, 100,000 cycles
- Non-contact voltage (For SSR drive): 12V DC±15%, Maximum 40mA (short circuit protected)
- DC current : 4 to 20mA DC, Load resistance, Maximum 550Ω

Alarm 1 output
- Action : ON/OFF action
- Hysteresis : 0.1 to 100.0℃ (℉), or 1 to 1000 (Default: 1.0℃)
- Output : Relay contact 1a
  Control capacity, 3A 250V AC (resistive load) Electrical life, 100,000 cycles

Control action

PID action (with auto-tuning function)
PI action: When derivative time is set to 0
PD action (with auto-reset function): When integral time is set to 0
P action (with auto-reset function): When derivative and integral time are set to 0.
ON/OFF action: When proportional band is set to 0 or 0.0
OUT1 proportional band : 0 to 1000℃ (2000℉), 0.0 to 1000.0℃ (℉) or 0.0 to 100.0%
(ON/OFF action when set to 0 or 0.0) (Default: 10℃)

Integral time : 0 to 1000sec (OFF when set to 0) (Default: 200sec)
Derivative time : 0 to 300sec (OFF when set to 0) (Default: 50sec)
OUT1 proportional cycle : 1 to 120sec (Default: 30sec for Relay contact, 3sec for Non-contact voltage, Not available for DC current)
ARW : 0 to 100% (Default: 50%)
OUT1 ON/OFF action hysteresis: 0.1 to 100.0℃ (℉), or 1 to 1000 (Default: 1.0℃)
OUT1 high limit setting : 0 to 100% (DC current: -5 to 105%) (Default: 100%)
OUT1 low limit setting : 0 to 100% (DC current: -5 to 105%) (Default: 0%)

Circuit insulation configuration

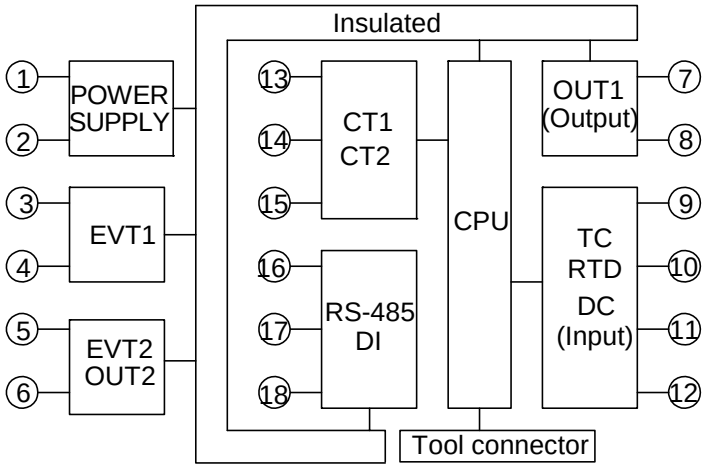

When OUT1 is a non-contact voltage or DC current and OUT2 is a non-contact voltage, OUT1 is not insulated from OUT2.
When OUT1 is a non-contact voltage or DC current, OUT1 is not insulated from RS-485, DI.
When OUT2 is a non-contact voltage, OUT2 is not insulated from RS-485, DI.

Insulation resistance : 10MΩ or more, at 500V DC
Dielectric strength : 1.5kV AC for 1 minute between input terminal and power terminal
1.5kV AC for 1 minute between output terminal and power terminal
Supply voltage : 100 to 240V AC 50/60Hz, 24V AC/DC 50/60Hz
Allowable voltage fluctuation: 100 to 240V AC: 85 to 264V AC,
24V AC/DC : 20 to 28V AC/DC
Power consumption : Approx. 8VA
Ambient temperature : 0 to 50℃ (32 to 122℉)
Ambient humidity : 35 to 85%RH (no condensation)
Weight : Approx. 120g
External dimensions : 48 x 48 x 62mm (W x H x D)
(Depth of control panel interior when rubber gasket is used: 54.5mm)
(Depth of control panel interior when rubber gasket is not used: 56.0mm)
Material : Flame resistant resin (Case)
Color : Ash gray (Case)
Attached functions:

[Power failure countermeasure]
The setting data is backed up in the non-volatile IC memory.

[Self-diagnosis]
The CPU is monitored by a watchdog timer, and when an abnormal status is found on the CPU, the controller is switched to warm-up status.

[Automatic cold junction temperature compensation] (Only thermocouple input)
This detects the temperature at the connecting terminal between the thermocouple and the instrument, and always maintains the same status as when the reference junction is located at 0℃ (32℉).

[Burnout]

When the thermocouple or RTD input is burnt out, OUT1 and OUT2 are turned OFF (for DC current output type, OUT1 low limit value) and the PV display flashes "‾ ‾ ‾ ‾".

However, for the manual control, the preset MV (manipulated variable) is outputted.

When the DC current or DC voltage input is disconnected, PV display flashes "_ _ _ _" for 4 to 20mA DC and 1 to 5V DC inputs, and "‾ ‾ ‾ ‾" for 0 to 1V DC input.

For 0 to 20mA DC, 0 to 5V DC and 0 to 10V DC inputs, the PV display indicates the value corresponding with 0mA or 0V input.

[Input abnormality indication]

Output status selection when input abnormal	Contents and Indication	Output status			
		OUT1		OUT2	
		Direct(cooling) action	Reverse(heating) action	Direct(cooling) action	Reverse(heating) action
oN	Overscale Measured value has exceeded Indication range high limit value. "‾ ‾ ‾ ‾" flashes.	ON (20mA) or OUT1 high limit value (*)	OFF (4mA) or OUT1 low limit value	OFF or OUT2 low limit value	ON or OUT2 high limit value (*)
oFF		OFF (4mA) or OUT1 low limit value			OFF or OUT2 low limit value
oN	Underscale Measured value has dropped below Indication range low limit value. "_ _ _ _" flashes.	OFF (4mA) or OUT1 low limit value	ON (20mA) or OUT1 high limit value (*)	ON or OUT2 high limit value (*)	OFF or OUT2 low limit value
oFF			OFF (4mA) or OUT1 low limit value	OFF or OUT2 low limit value	

Only for DC input and DC current output type, [Output status selection when input abnormal] is usable.

For manual control, the preset manipulated variable (MV) is outputted.

(*) Outputs a value between OFF (4mA) and ON (20mA) or between OUT1 (or OUT2) low limit value and OUT1 (or OUT2) high limit value, depending on deviation.

[Indication range and Control range]

Thermocouple input:

[Input range low limit value -50℃ (100℉)] to [Input range high limit value +50℃ (100℉)]

RTD input:

[Input range low limit value -Input span x 1%] to [Input range high limit value +50℃ (100℉)]

DC current, voltage input:

[Scaling low limit value -Scaling span x 1%] to [Scaling high limit value +Scaling span x 10%)

[Warm-up indication]

After the power supply to the instrument is turned on, the PV display indicates the sensor input type, and SV display indicates input range high limit value (for thermocouple, RTD) or Scaling high limit value (for DC input) for approx. 3 seconds.

[Auto/Manual control switching]

Select "Auto/Manual control" during [52] OUT/OFF key function selection in the Setup mode, then press the OUT/OFF key in the PV/SV display mode. Auto/Manual control can be switched.

[Tool port communication]

By connecting to the tool connector of the KT4H/B, the following operations can be conducted from the external computer.

(1) Reading and setting of SV, PID and various set values
(2) Reading of PV and action status
(3) Function change

Communication interface: C-MOS level (Cannot be used with Serial communication option)

Cable for use: Tool Cable (AKT4H820)

Accessories included:

Mounting frame 1 piece
Rubber gasket (Front mounted to the KT4H/B) 1 piece
Installation instructions (A3 unfolded, English/Japanese) 1 copy
Communication installation instructions (When Serial communication option is added) 1 copy
CT (Current transformer)
CT1 (AKT4815) (When Heater burnout alarm Single phase 20A option is added) 1piece
CT2 (AKT4816) (When Heater burnout alarm Single phase 50A option is added) 1 piece
CT1 (AKT4815) (When Heater burnout alarm 3-phase 20A option is added) 2 pieces
CT2 (AKT4816) (When Heater burnout alarm 3-phase 50A option is added) 2 pieces

Accessories sold separately: Terminal cover (AKT4H801)
50Ω shunt resistor for DC current input (AKT4810)
Tool cable (AKT4H820)

13.2 Optional specifications

Alarm 2 output

If the Alarm 2 option is added, Heating/Cooling control option cannot be added.
If the Alarm 2 option and Heater burnout alarm option are added, they utilize common output terminals.
Action : ON/OFF action
Hysteresis: 0.1 to 100.0℃ (℉), (DC voltage, current input: 1 to 1000) (Default: 1.0℃)
Output : Relay contact, 1a Control capacity, 3A 250V AC (Resistive load) Electrical life, 100,000 cycles

Heater burnout alarm (including sensor burnout alarm)

Monitors heater current with CT (current transformer), and detects burnout.
This alarm is also activated when indication is overscale and underscale.
This option cannot be added to a DC current output type.
If this option is added, Heating/Cooling control option cannot be added.
If Heater burnout alarm option and Alarm 2 option are added, they utilize common output terminals.
Rated current : Single phase 20A, Single phase 50A, 3-phase 20A, 3-phase 50A (Must be specified)
Setting range : Rated current 20A: 0.0 to 20.0A (Off when set to 0.0)
Rated current 50A: 0.0 to 50.0A (Off when set to 0.0)
Setting accuracy: Within ±5% of the rated value
Action : ON/OFF action
Output : Relay contact, 1a Control capacity, 3A 250V AC (resistive load)
Electrical life, 100,000 cycles

Heating/Cooling control (OUT2)

If this option is added, Alarm 2 option and Heater burnout alarm option cannot be added.
The specification of Heating side is the same as that of OUT1.
OUT2 proportional band: 0.0 to 10.0 times OUT1 proportional band (ON/OFF action when set to 0.0)
OUT2 integral time : The same as that of OUT1.
OUT2 derivative time : The same as that of OUT1.
OUT2 proportional cycle: 1 to 120 seconds (Default: 30sec for Relay contact, 3sec for Non-contact voltage)
Overlap band/Dead band:
Thermocouple, RTD input : -100.0 to 100.0℃ (℉)
DC current, DC voltage input: -1000 to 1000 (The placement of the decimal point follows the selection.)
OUT2 ON/OFF action hysteresis:
Thermocouple, RTD input : 0.1 to 100.0℃ (℉) (Default: 1.0℃)
DC current, DC voltage input: 1 to 1000 (The placement of the decimal point follows the selection.)
OUT2 high limit: 0 to 100% (Default: 100%)
OUT2 low limit : 0 to 100% (Default: 0%)
OUT2 action mode selection:
One cooling action can be selected from Air cooling (linear characteristic), Oil cooling (1.5th power of the linear characteristic) and Water cooling (2nd power of the linear characteristic) by key.
Output: Relay contact 1a, Control capacity: 3A 250V AC (resistive load) Electrical life, 100,000 cycles
Non-contact voltage (for SSR drive) 12V DC±15% Max. 40mA (short circuit protected)

Serial communication

Cannot be used with Tool port communication. If this option is added, Contact input option cannot be added.
The following operations can be carried out from the external computer.
(1) Reading and setting of the SV, PID values and various set values
(2) Reading of the PV and action status (3) Function change

Communication line : EIA RS-485
Communication system : Half-duplex communication start-stop synchronous
Cable length : Maximum communication distance 1,000m
Cable resistance: Within 50Ω (The terminator is not necessary or 120Ω or more on the PLC side.)
Communication speed : 9600 (2400, 4800, 9600, 19200bps) Selectable by key (Default: 9600bps)
Data bit/Parity : 7 bits/Even parity (7 bits, 8 bits/Even, Odd, No parity) Selectable by key (Default: 7 bits/Even parity)
Stop bit : 1 (1 or 2) Selectable by key (Default: 1)
Communication response time : 5 to 99ms
Communication protocol : Modbus ASCII (Modbus ASCII/Modbus RTU/MEWTOCOL) Selectable by key (Default: Modbus ASCII)
Continuous data reading and writing are not available for MEWTOCOL.
Only RD and WD commands are usable in MEWTOCOL.

Data format

Communication protocol	Modbus ASCII	Modbus RTU	MEWTOCOL (Slave)
Start bit	1	1	1
Data bit	7 or 8	8	7 or 8
Parity	Yes (Even, Odd) No parity	Yes (Even, Odd) No parity	Yes (Even, Odd) No parity
Stop bit	1 or 2	1 or 2	1 or 2

Number of connectable units : Maximum 31 units to 1 host computer
Error detection (*) : Parity, LRC (Modbus ASCII), CRC-16 (Modbus RTU), BCC (MEWTOCOL)
Error correction : Command request repeat system
Instrument number (Address): 1 (1 to 99) Settable by key
Code form (*) : ASCII (Modbus ASCII, MEWTOCOL), binary (Modbus RTU)
(*) This is automatically switched upon selecting the communication protocol.

Contact input

If this option is added, Serial communication option cannot be added.
SV, SV2, SV3, SV4 or OUT/OFF function can be switched by external contact.
If "Set value memory external selection" or "OUT/OFF external selection 1 (SV, SV2 can be switched)" is selected during "Contact input function selection", the MEMO display indicates the selected memory number.
Actions depend on the selection of OUT/OFF key function and Contact input function as follows.

When OUT/OFF function ([52] oFF in the Setup mode) is selected

Connecting terminal number		Contact input function: [50] in the Setup mode		
Between 17-18 (DI1-COM)	Between 16-18 (DI2-COM)	Set value memory external selection (SM)	OUT/OFF external selection 1 (oUT)	OUT/OFF external selection 2 (oUT2)
Open	Open	SV	SV	SV
Closed	Open	SV2	SV2	
Open	Closed	SV3	Control output OFF	Control output OFF
Closed	Closed	SV4		

When Auto/Manual control function ([52] MANU in the Setup mode) is selected

Connecting terminal number		Contact input function: [50] in the Setup mode		
Between 17-18 (DI1-COM)	Between 16-18 (DI2-COM)	Set value memory external selection (SM)	OUT/OFF external selection 1 (oUT)	OUT/OFF external selection 2 (oUT2)
Open	Open	SV	SV (Automatic control)	SV (Automatic control)
Closed	Open	SV2	SV2 (Automatic control)	
Open	Closed	SV3	Manual control	Manual control
Closed	Closed	SV4		

Circuit current when closed: Approx. 6mA

Internal circuit

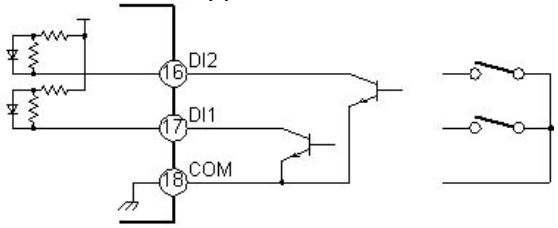

When a transistor is used as an external contact, use Max. 18V or more voltage.

14. Troubleshooting

If any malfunctions occur, refer to the following items after checking the power supply to the controller.

14.1 Indication

Problem	Presumed cause and solution
[oFF□] is indicated on the PV display.	• Control output OFF function is working. Press the OUT/OFF key for approx. 1 second to release the function.
[- - - -] is flashing on the PV display.	• Burnout of Thermocouple, RTD or disconnection of DC voltage (0 to 1V DC) Change each sensor. **How to check whether the sensor is burnt out** [Thermocouple] If the input terminal of the instrument is shorted, and if a value around room temperature is indicated, the instrument is likely to be operating normally, however, the sensor may be burnt out. [RTD] If approx. 100Ω of resistance is connected to the input terminals between A-B of the instrument and between B-B is shorted, and if approximate 0℃ (32℉) is indicated, the instrument is likely to be operating normally, however, the sensor may be burnt out. [DC voltage (0 to 1V DC)] If the input terminal of the instrument is shorted, and if a scaling low limit value is indicated, the instrument is likely to be operating normally, however, the signal wire may be disconnected. • Check whether the input terminals of thermocouple, RTD or DC voltage (0 to 1V DC) are securely mounted to the instrument input terminals. Connect the sensor terminals to the instrument input terminals securely.
[- - - -] is flashing on the PV display.	• Check whether input signal source for DC voltage (1 to 5V DC) or DC current (4 to 20mA DC) is disconnected. **How to check whether the input signal wire is disconnected** [DC voltage (1 to 5V DC)] If the input to the input terminals of the instrument is 1V DC and if a scaling low limit value is indicated, the instrument is likely to be operating normally, however, the signal wire may be disconnected. [DC current (4 to 20mA DC)] If the input to the input terminals of the instrument is 4mA DC and if a scaling low limit value is indicated, the instrument is likely to be operating normally, however, the signal wire may be disconnected. • Check whether input signal wire for DC voltage (1 to 5V DC) or DC current (4 to 20mA DC) is securely connected to the instrument input terminals. • Check if polarity of thermocouple or compensating lead wire is correct. • Check whether codes (A, B, B) of RTD agree with the instrument terminals.
PV display keeps indicating the value which was set during Scaling low limit setting.	• Check whether the input signal source for DC voltage (0 to 5V DC, 0 to 10V DC) and DC current (0 to 20mA DC) is disconnected. **How to check whether the input signal wire is disconnected** [DC voltage (0 to 5V DC, 0 to 10V DC)] If the input to the input terminals of the instrument is 1V DC and if the value corresponding to 1V DC is indicated, the instrument is likely to be operating normally, however, the signal wire may be disconnected. [DC current (0 to 20mA DC)] If the input to the input terminals of the instrument is 1mA DC and if the value corresponding to 1mA DC is indicated, the instrument is likely to be operating normally, however, the signal wire may be disconnected.

	• Check whether the input lead wire terminals for DC voltage (0 to 5V DC, 0 to 10V DC) or DC current (0 to 20mA DC) are securely mounted to the instrument input terminals.
The indication of PV display is abnormal or unstable.	• Check whether sensor input or temperature unit (℃ or ℉) is correct. Select the sensor input and temperature unit (℃ or ℉) properly. • Sensor correcting value is unsuitable. Set it to a suitable value. • Check whether the specification of the sensor is correct. • AC leaks into the sensor circuit. Use an ungrounded type sensor. • There may be equipment that interferes with or makes noise near the controller. Keep equipment that interferes with or makes noise away from the controller.
[ERR 1] is indicated on the PV display.	• Internal memory is defective. Please contact our agency or us.

14.2 Key operation

Problem	Presumed cause and solution
• Unable to set the SV, P, I, D, proportional cycle or alarm setting • The values do not change by △, ▽ keys.	• Set value lock (Lock 1 or Lock 2) is selected. Release the lock in the “Set value lock selection” of Auxiliary function setting mode. • Auto-tuning or auto-reset is performing. In the case of auto-tuning, cancel auto-tuning. It takes approximately 4 minutes until auto-reset is finished.
The setting indication does not change in the input range even if the △, ▽ keys are pressed, and new values are unable to be set.	• Scaling high limit or low limit value may be set at the point where the value does not change. Set it to a suitable value while in the Setup mode.

14.3 Control

Problem	Presumed cause and solution
Temperature does not rise.	• Sensor is out of order. Replace the sensor. • Check whether the Sensor or control output terminals are securely mounted to the instrument input terminals. Ensure that the sensor or control output terminals are mounted to the instrument input terminals securely. • Check whether the wiring of sensor or control output terminals is correct.
The control output remains in an ON status.	• OUT1 (OUT2) low limit value is set to 100% or higher in the Setup mode. Set it to a suitable value.
The control output remains in an OFF status.	• OUT1 (OUT2) high limit value is set to 0% or less in the Setup mode. Set it to a suitable value.

14.4 Communication

If any malfunctions occur, refer to the following items after checking the power supply to the master and the slave.

Problem	Presumed cause and solution
Communication failure	• Make sure that communication connector is securely connected. • Check that wiring of the communication connector is correct. (Refer to Section “12.2 Wiring”.) • Burnout or imperfect contact on the communication cable and the connector. • Communication speed of the slave does not coincide with that of the master. (Refer to Section “12.3 Communication parameter setting”.) • The data bit, parity and stop bit of the master do not accord with those of the slave. (Refer to Section “12.3 Communication parameter setting”.) • The instrument number (address) of the slave does not coincide with that of the command. (Refer to Section “12.3 Communication parameter setting”.) • The instrument numbers (addresses) are duplicated in multiple slaves. (Refer to Section “12.3 Communication parameter setting”.) • Make sure that the program is appropriate for the transmission timing. (Refer to Section “12.4 Communication procedures”.)
Although communication is occurring, the response is “NAK”.	• Check that a non-existent command code has not been sent. • The setting command data exceeds the setting range of the slave. • The controller cannot be set when functions such as AT are performing. • The KT4H/B is in the front key operation setting mode.

For all other malfunctions, please contact our main office or dealers.

Revision History

Issue Date	Manual no.	Content of revision		
May, 2005	ARCT1F412E	First edition		
October, 2005	ARCT1F412E-1	2nd edition	P.14 P.15 P.16 P.18 P.19 P.20 P.21	Addition of explanation in detail
April, 2007	ARCT1F412E-2	3rd edition	P.3	Addition of explanation in detail
			P.32~33	Addition of explanation in detail
			P.34~35	Addition of explanation of “SV rise rate, SV fall rate setting action”.
			P37	Addition of explanation in detail
March, 2008	ARCT1F412E-3	4th edition	・Addition of KT4B (Black type) series	
			P.4	Addition of explanation of “thermocouple and compensating lead wire”
			P.10	Change (Fig.5.1-1) Change model name Change tightening torque to 0.63N・m
October, 2009	ARCT1F412E-4	5th edition	Change company name	
January, 2011	ARCT1F412E-5	6th edition	Change company name	

Please contact .....

Panasonic Electric Works SUNX Co., Ltd.

■ Head office: 2431-1 Ushiyama-cho, Kasugai-shi, Aichi, 486-0901, Japan
■ Telephone: +81-568-33-7861
■ Facsimile: +81-568-33-8591
panasonic-electric-works.net/sunx

All Rights Reserved © 2011 COPYRIGHT Panasonic Electric Works SUNX Co., Ltd.

ARCT1F412E-5 201101

Specifications are subject to change without notice.