PCB Holder

Features

- Snap rivet locking circuit board support (Pack of 50)
- Designed to mount on a chassis and be secured with a plastic rivet
- The rivet and support can be push-fitted together quickly and easily
- Rivet is flush fitting and gives minimal protrusion under the chassis

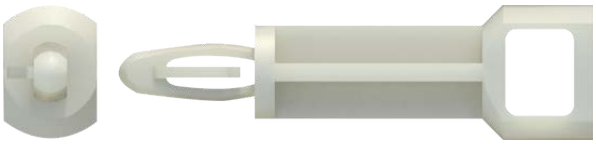

Specification

Material	PA66, UL94-V2
Colour	Natural
Length	19.7 mm
Panel Thickness	Top: 1.6 mm, Bottom 0.7 ... 1.6 mm
Top Hole Diameter	4 mm +/- 0.08
Bottom Hole	4.1 ... 4.2 mm

Drawing

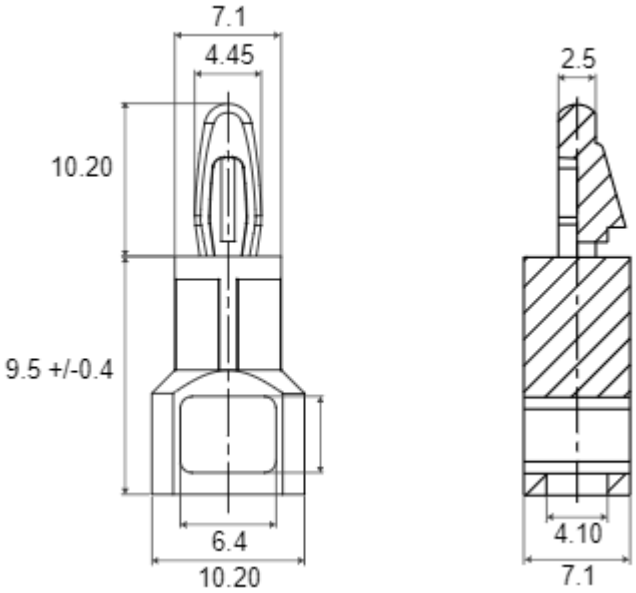

Art. Nr.
RND 610-00122