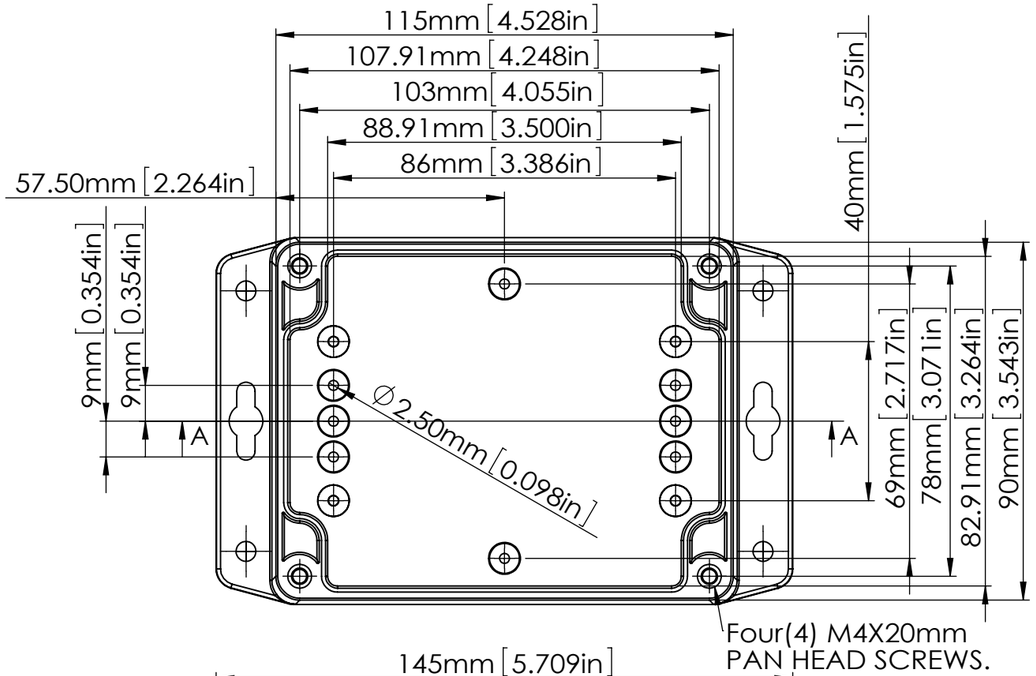

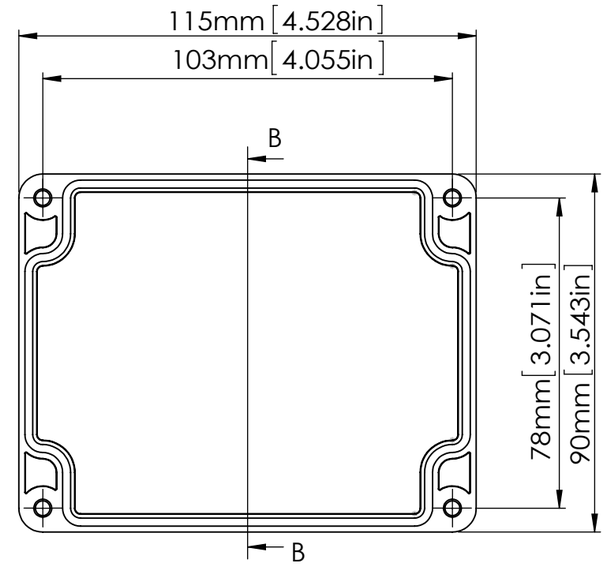

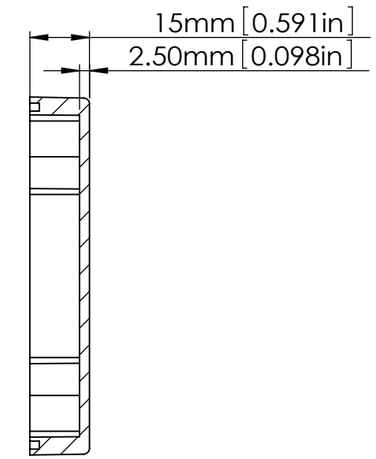

SECTION B-B
SCALE 2 : 3

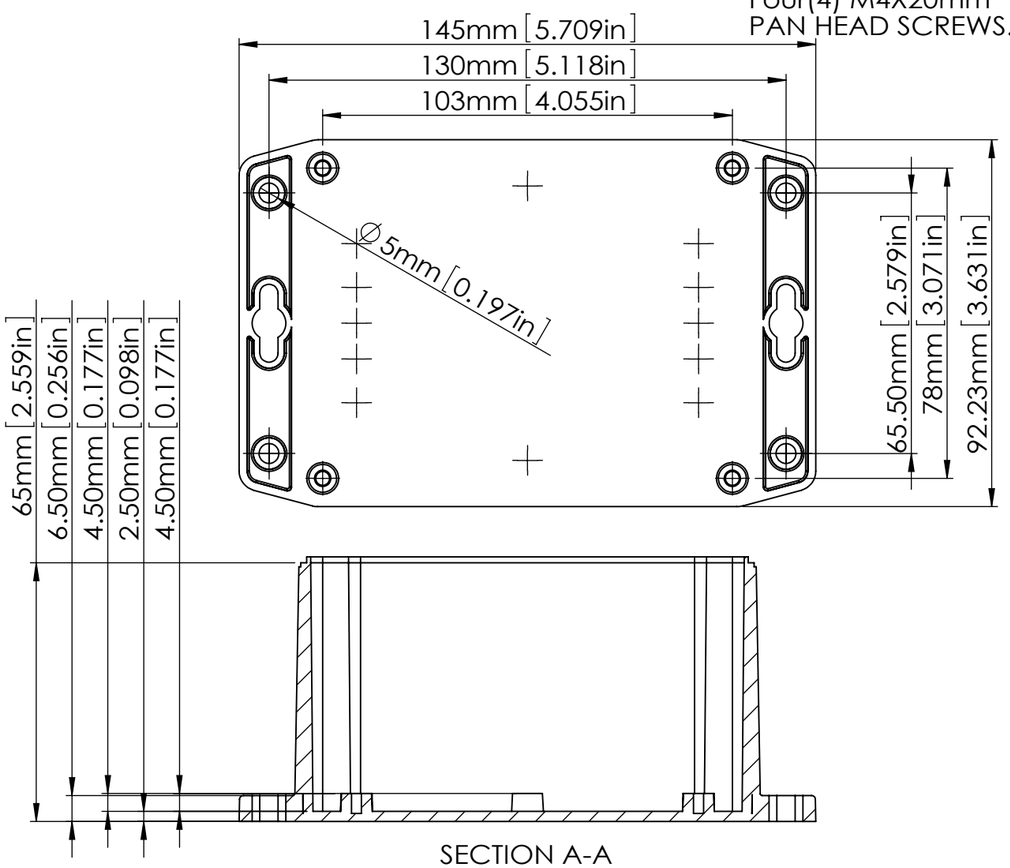

SECTION A-A
SCALE 2 : 3

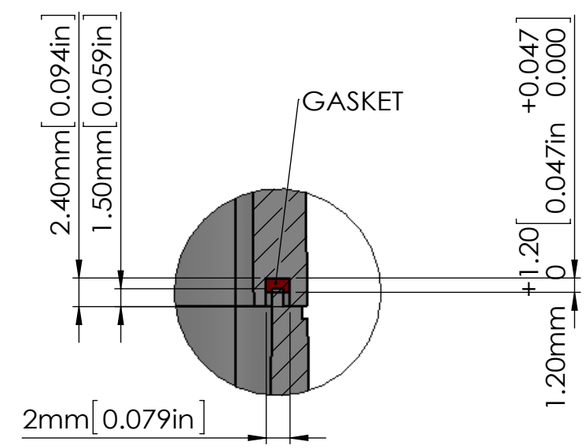

SECTION C
SCALE 2 : 1

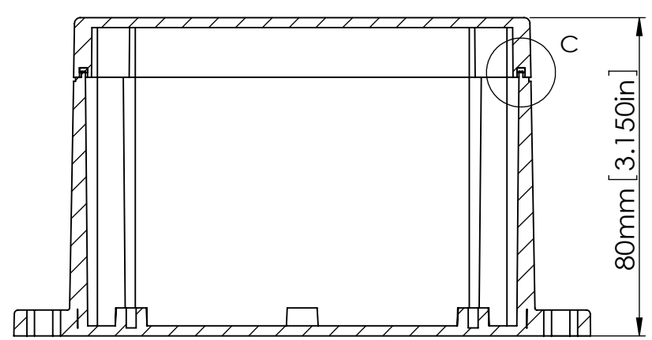

According to ISO 2768-m	
Measuring DIM=L	Tolerances
0.5<L<=3.0mm	±0.1mm
3.0<L<=6.0 mm	±0.1mm
6.0<L<=30.0 mm	±0.2mm
30.0<L<=120.0 mm	±0.3mm
120.0<L<=400.0 mm	±0.5mm
400.0<L<=1000.0 mm	±0.8mm