KEMET Part Number: ALP22A102DF385 Not for New Design

(A622HW102M385A)

ALP22, Aluminum Electrolytic, 1,000 uF, 20%, 385 VDC, -40/+85°C

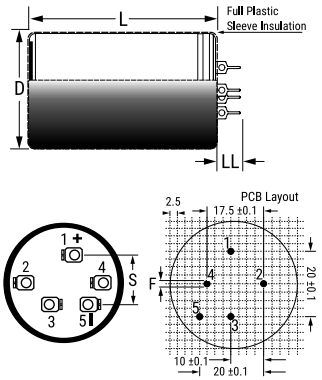

General Information	
Series:	ALP22
Dielectric:	Aluminum Electrolytic
Description:	Solder Pin, Aluminum Electrolytic
Features:	Solder Pin
RoHS:	Yes
Lead:	5 Pin Solder
AEC-Q200:	No
Component Weight:	170 g
Notes:	Dimensions D And L Include Sleeving.

Dimensions	
D	40mm +/-1mm
L	105mm +/-2mm
S	20mm +/-0.1mm
LL	7.5mm +/-0.5mm
F	1.3mm

Specifications	
Capacitance:	1,000 uF
Capacitance Tolerance:	20%
Voltage DC:	385 VDC, 423.5 VDC (Surge)
Temperature Range:	-40/+85°C
Rated Temperature:	85°C
Life:	26000 Hrs
Leakage Current:	2310 uA (5min 20°C)

Packaging Specifications	
Sleeving:	Yes
Packaging:	Bulk, Bag

Statements of suitability for certain applications are based on our knowledge of typical operating conditions for such applications, but are not intended to constitute - and we specifically disclaim - any warranty concerning suitability for a specific customer application or use. This Information is intended for use only by customers who have the requisite experience and capability to determine the correct products for their application. Any technical advice inferred from this Information or otherwise provided by us with reference to the use of our products is given gratis, and we assume no obligation or liability for the advice given or results obtained.

© 2006 - 2022 KEMET