CH-BC

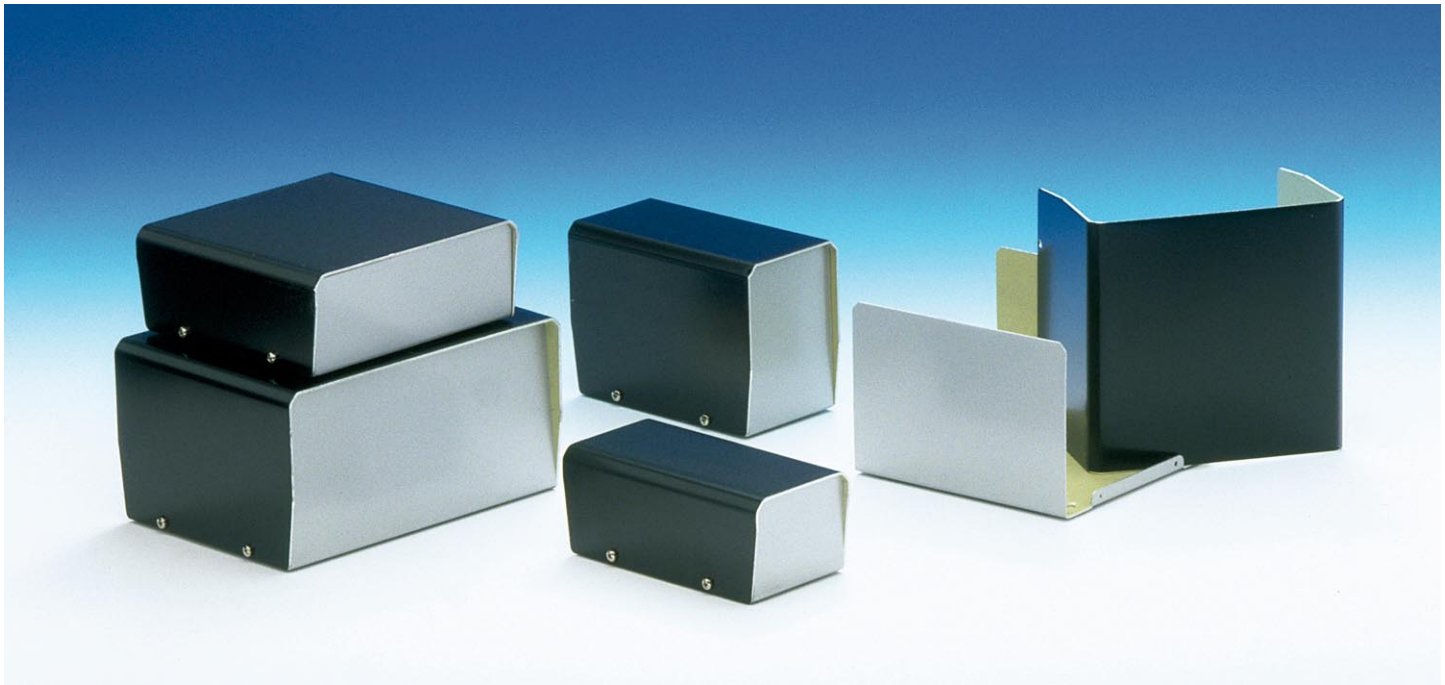

DESIGN
Aluminium enclosure with silver metalised base and black cover.
Simple and speedy to assemble, with four screws to put in place.

OPTIONS
Drilling
Punching
Silk screening

MATERIALS and COLOURS
ALUMINIUM

Black	RAL 9004
Silver	RAL 9006

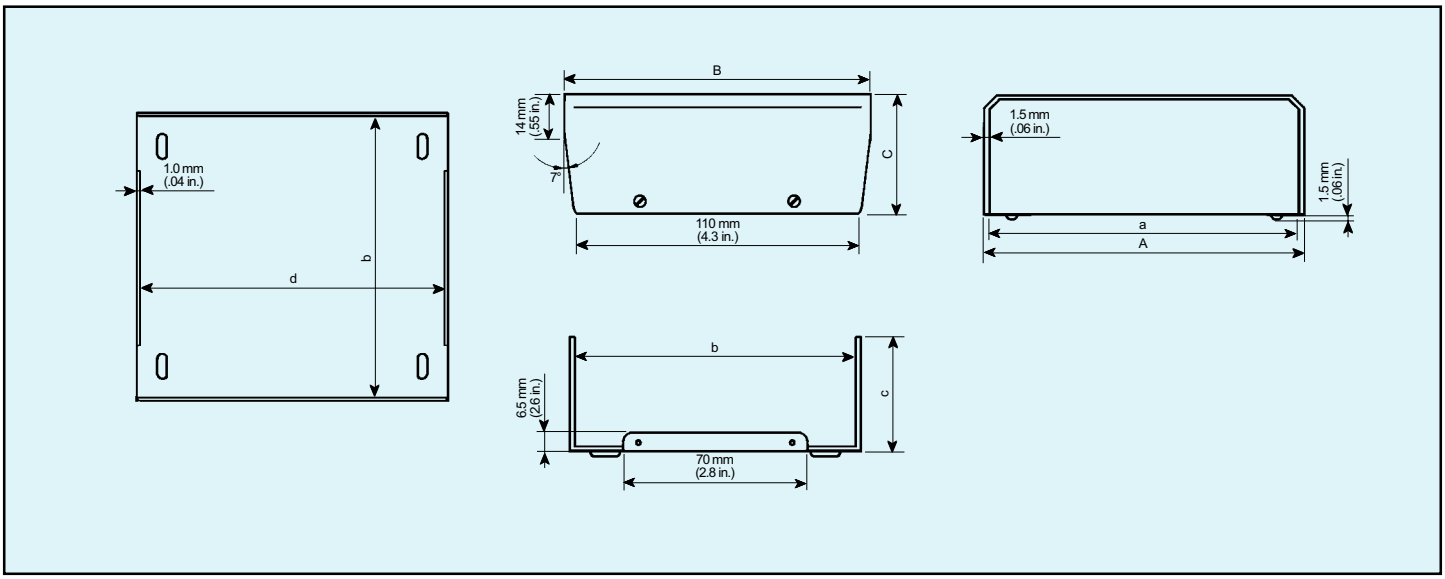

MODEL	DIMENSIONS mm																	
	EXTERNAL						INTERNAL											
	A	B	C	D	E	F	a	b	c	d	e	f	g	h	i	j	k	l
CH/1	62.0	118.0	48.0				59.0	108.0	45.0	56.0								
CH/2	124.0	118.0	48.0				121.0	108.0	45.0	119.0								
CH/3	164.0	118.0	48.0				161.0	108.0	45.0	159.0								
CH/4	224.0	118.0	48.0				221.0	108.0	45.0	219.0								
BC/1	62.0	118.0	84.0				59.0	108.0	81.0	56.0								
BC/2	123.0	118.0	84.0				120.0	108.0	81.0	118.0								
BC/3	163.0	118.0	84.0				160.0	108.0	81.0	158.0								
BC/4	223.0	118.0	84.0				220.0	108.0	81.0	218.0								