MINISNAP

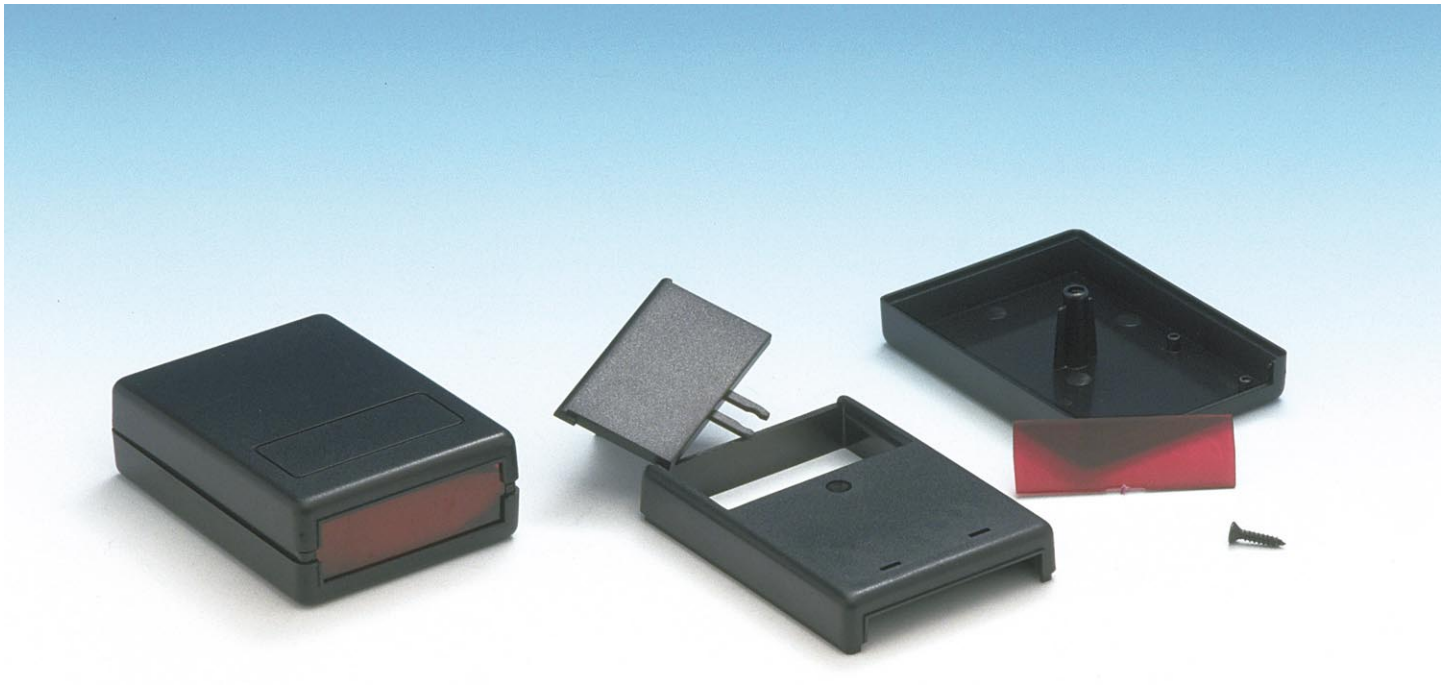

DESIGN
ABS enclosure with rounded corners. Polystyrene red transparent panel permeable to infrared light. The cover has 4 PCB mounting studs. 9V battery compartment with a snap sliding door. Closing by only one screw. Mat surface finish.

ACCESSORIES
Stainless steel clip (Mod. CL1)
Dual miniature clip for 9V battery (Mod. AB9)

OPTIONS
Flame retardant materials
CNC machining
Silk-screening

MATERIALS and COLOURS

ABS		*POLYSTYRENE*	
Black	RAL 9004	Red	RAL 3003

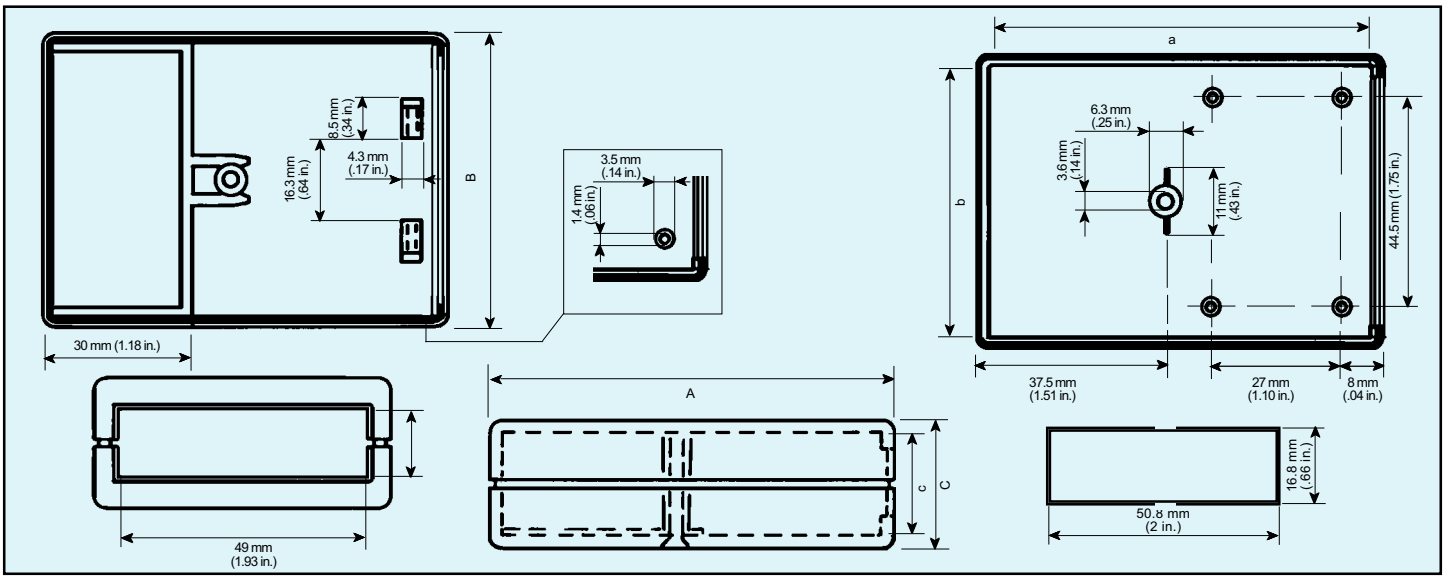

MODEL	DIMENSIONS mm																	
	EXTERNAL						INTERNAL											
	A	B	C	D	E	F	a	b	c	d	e	f	g	h	i	j	k	l
10005-B	82.0	60.0	26.0				76.0	56.0	22.0									